Manualslib.com - The Global Manuals Library

FURUNO FELCOM 15 INSTALLATION MANUAL

Quick Links

System Configuration
Antenna Unit
Antenna Cable Connector at the Terminal Unit
Setting the Imn (Inmarsat Mobile No.)
Setting for External Equipment
Interconnection Diagram

Table of Contents

Table of Contents
Antenna Unit
Terminal Unit
Distress Alert/Received Call Unit IC-305/Alarm Unit IC-306
Printer PP-510 (option)/EGC Printer PP-505 (option)
AC/DC Power Supply Unit PR-240 (option)
Junction Box IC-315
Antenna Cable Connector at the Terminal Unit
Distress Alert/Received Call Unit IC-305
Alarm Unit IC-306
Junction Box IC-315
Setting the IMN (INMARSAT MOBILE NO.)
Setting for External Equipment
Other ManualsLib Projects

FURUNO

INMARSAT-C MOBILE EARTH STATION
FELCOM 15
Installation Manual

TABLE OF CONTENTS

SAFETY INSTRUCTIONS i

EQUIPMENT LISTS ii

SYSTEM CONFIGURATION iv

1. MOUNTING THE UNIT 1
- 1.1 Antenna Unit 1
- 1.2 Terminal Unit 4
- 1.3 Distress Alert/Received Call Unit IC-305/Alarm Unit IC-306 6
- 1.4 Printer PP-510 (option)/EGC Printer PP-505 (option) 7
- 1.5 AC/DC Power Supply Unit PR-240 (option) 7
- 1.6 Junction Box IC-315 8

2. WIRING 9
- 2.1 Antenna Cable Connector at the Terminal Unit 10
- 2.2 Distress Alert/Received Call Unit IC-305 13
- 2.3 Alarm Unit IC-306 14
- 2.4 Junction Box IC-315 15

3. INITIAL SETTING 16
- 3.1 Setting the IMN (INMARSAT MOBILE NO.) 16
- 3.2 Setting for External Equipment 17

4. INSTALLATION OF GPS BOARD (OPTION) 18

5. CHANGING POWER SUPPLY SPECIFICATIONS 21

PACKING LISTS A-1

OUTLINE DRAWINGS D-1

INTERCONNECTION DIAGRAM S-1

FURUNO ELECTRIC CO., LTD.

www.furuno.com

All brand and product names are trademarks, registered trademarks or service marks of their respective holders.

Downloaded from www.Manualslib.com manuals search engine

ECF
(Elemental Chlorine Free)
The paper used in this manual
is elemental chlorine free.

FURUNO ELECTRIC CO., LTD.

9-52 Ashihara-cho,
Nishinomiya, 662-8580, JAPAN

Telephone : +81-(0)798-65-2111
Fax : +81-(0)798-65-4200

・FURUNO Authorized Distributor/Dealer

All rights reserved. Printed in Japan

A : DEC. 2002
G2 : JAN. 17, 2012

Pub. No. IME-56350-G2

(YOSH) FELCOM15

00080935116

Downloaded from www.Manualslib.com manuals search engine

⚠ SAFETY INSTRUCTIONS

⚠ WARNING

ELECTRICAL SHOCK HAZARD

Do not open the equipment unless totally familiar with electrical circuits and service manual.

Only qualified personnel should work inside the equipment.

Do not approach the radome closer than 60 cm when it is transmitting.

Microwave radiation can cause severe injury or illness.
Radiation level:
10 W/m² at 60 cm

Turn off the power at the mains switchboard before beginning the installation. Post a sign near the switch to indicate it should not be turned on while the equipment is being installed.

Fire, electrical shock or serious injury can result if the power is left on or is applied while the eqiuipment is being installed.

⚠ CAUTION

Confirm that the power supply voltage is compatible with the voltage rating of the equipment.

Connection to the wrong power supply can cause fire or equipment damage. The voltage rating appears on the label at the rear of the terminal unit.

Use the correct fuse.

Use 10 A fuse (defalt setting) for 12 VDC power supply, or replace the fuse to 5 A (supplied as spare parts) with 24 VDC.

Use of wrong fuse can result in damage to the equipment.

Keep the following compass safe distances.

	Standard	Steering
Antenna Unit IC-115	0.30 m	0.30 m
Terminal Unit IC-215	0.70 m	0.40 m
Printer PP-510	1.00 m	0.80 m
Junction Box IC-315	1.00 m	0.70 m
Distress Alert/ Received Call Unit IC-305	0.50 m	0.30 m
Alarm Unit IC-306	0.50 m	0.30 m
EGC Printer PP-505	2.05 m	1.40 m
AC/DC Power Supply Unit PR-240	0.90 m	0.60 m
Mini keyboard	0.30 m	0.30 m

Attach securely protection earth to the ship's body.

The protection earth is required to the power supply to prevent electrical shock.

Downloaded from www.Manualslib.com manuals search engine

EQUIPMENT LISTS

Standard Supply

Name	Type	Code No.	Qty	Remarks
Antenna Unit	IC-115	-	1	
Terminal Unit	IC-215	-	1	
Distress Alert/ Received Call Unit	IC-305	-	1	
Alarm Unit	IC-306	-	1	
Junction Box	IC-315	-	1	w/CP16-02501*
Installation Materials	CP16-02101	004-439-060	1 set	For 30 m antenna cable (w/o armor)*
	CP16-05001	001-101-960		For 30 m antenna cable (w/armor)*
	CP16-02111	004-439-070		For 50 m antenna cable (w/armor)*
	CP16-02121	004-439-080		For 100 m antenna cable (w/armor)*
	CP16-02300	000-043-433	1 set	CP16-02301 (for IC-215)*, CP16-02302 (for keyboard)*
	CP16-02201	004-438-890	1 set	For IC-305/306
	TP5FBAW-5DFB	000-159-523-11	1	30 m antenna cable (w/o armor)
	5D-FB-CV-NP	000-173-676-10		30 m antenna cable (w/armor)
	8D-FB-CV	000-168-241-10		50 m antenna cable (w/armor)
	12D-SFA-CV	000-138-866		100 m antenna cable (w/armor)
Accessories	FP16-00600	000-043-434	1 set	Mini keyboard (G84-4100PPAUS), FD (FP16-00601)
Spare Parts	SP16-01301	004-439-370	1 set	Fuse*

Optional Supply

Name	Type	Code No.	Qty	Remarks
FD-ROM	16-5-0164	004-438-920	1 set	
GPS Board	OP16-47	001-017-110	1 set	
GPS Board Kit	OP16-48	000-011-766	1 set	
RF Cover (GPS)	OP16-49	000-011-767	1	
EGC Printer	PP-505	-	1	
Printer	PP-510	-	1	w/CP16-01200*
AC/DC Power Supply Unit	PR-240	-	1	w/CP24-00151*
5-pair cable	CO-SPEVV-SB-C 0.2x5P	000-560-452	1	For junction box, 10m
		000-103-868		For junction box, 20m
		000-103-869		For junction box, 30m
		000-132-829		For junction box, 40m
		000-132-828		For junction box, 50m
SSAS Modification Kit**	OP16-33	000-043-492	1	IC-307 (2units), FD-ROM (for RFCON CPU, for TERM CPU)
SSAS Alert Unit**	IC-307	000-043-473	1	w/CP16-03101, FP16-00901
Flush Mounting Kit	OP16-27	004-448-000	1	For distress alert/received call unit, alarm unit
	OP16-28	004-448-010	1	For SSAS alert unit
ALC (FFA) Modification Kit*	OP16-26	004-439-840	1	
Russian Language Kit	OP16-43	004-449-590	1	For IC-215
PC Terminal Software	OP16-45	004-449-600	1	Russian Language
Antenna Mounting Kit	CP16-03701	004-555-000	1 set	

Downloaded from www.Manualslib.com manuals search engine

Antenna Bracket	CP16-03702	001-016-260	1	See page D-14.
Antenna Mounting Pipe	CP16-03703	001-014-510	1	

*: See packing lists at the back of this manual.

**: The SSAS modification kit is required for the SSAS. For installation of three IC-307s, additional SSAS alert unit is necessary.

Downloaded from www.Manualslib.com manuals search engine

SYSTEM CONFIGURATION

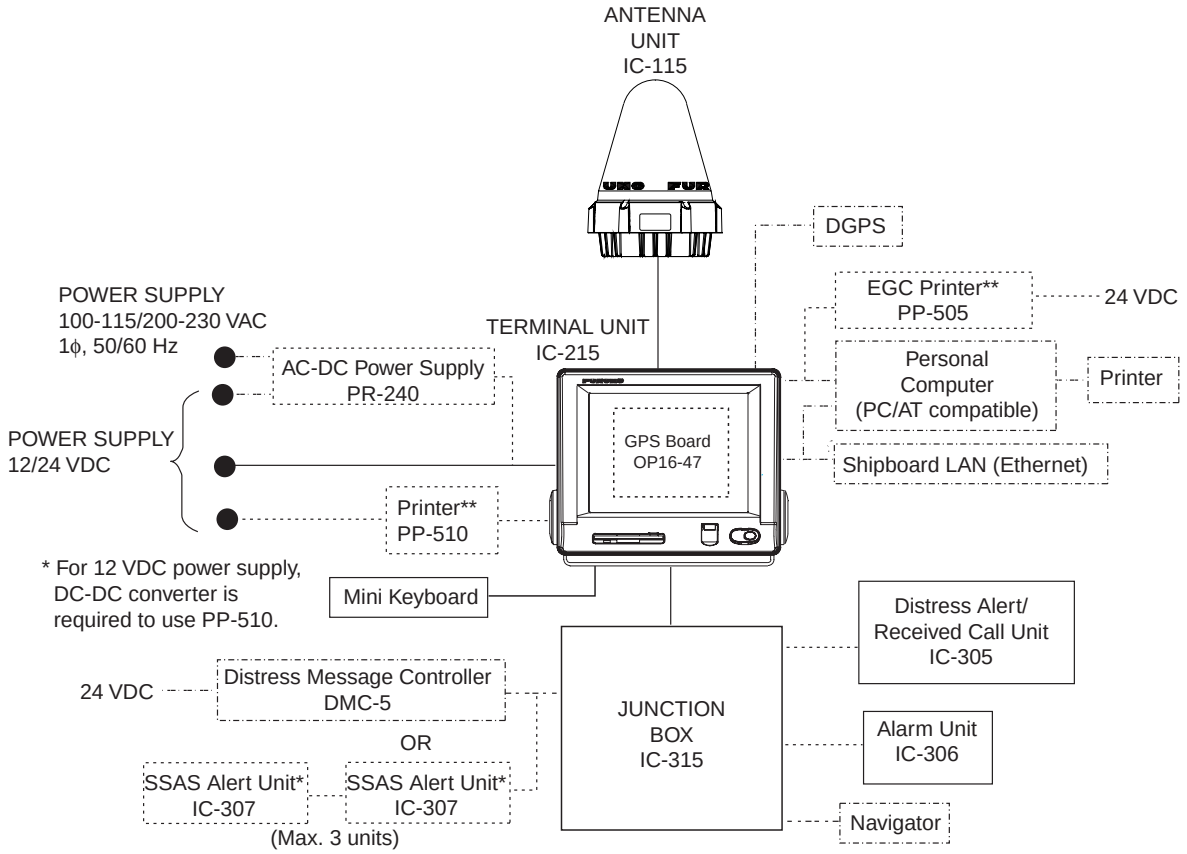

*: At least two SSAS Alert Units are required.
**: Mandatory for EGC operation as required by IMO RES. A.664(16).

——— : Standard Supply
------- : Option
-·-·-·- : Local Supply

CATEGORY OF UNITS

Unit	Category
Terminal Unit	Protected from weather
Antenna Unit	Exposed to weather
Other Units	Protected from weather

Downloaded from www.Manualslib.com manuals search engine

1. MOUNTING THE UNIT

NOTICE

Do not apply paint, anti-corrosive sealant or contact spray to coating or plastic parts of the equipment.

Those items contain organic solvents that can damage coating and plastic parts, especially plastic connectors.

1.1 Antenna Unit

Mounting Location

- Mount the omnidirectional antenna unit high atop a mast clear of stays and the turning diameter of a radar antenna. The ideal mounting location would be where no obstacle appears in the fore and aft directions down to -5º and down to -15º in the port and starboard directions. This concept is illustrated in the figure below. Shadow sector of the antenna mast, whip antenna, etc. should be within 2 degrees at one meter from the antenna unit.

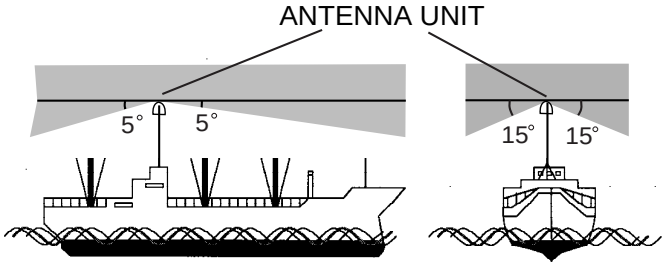

Antenna unit mounting location

- If both Inmarsat-B/F and Inmarsat-C ship earth stations are installed, separate the Inmarsat-B/F antenna at least 8 m from the Inmarsat-C antenna.
- Separate the antenna unit from an S-band radar as follows:

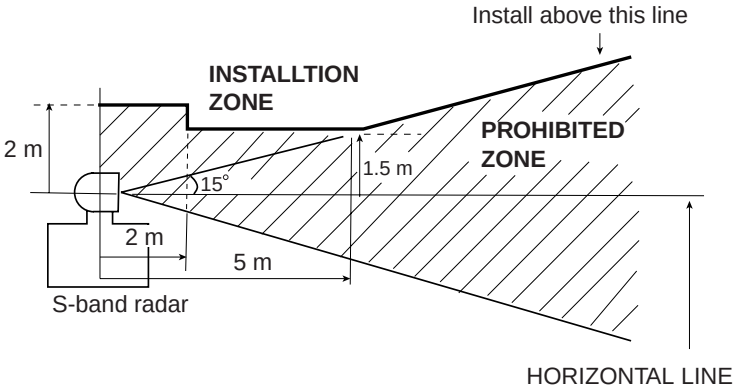

S-band radar and installation area

Downloaded from www.Manualslib.com manuals search engine

- The allowable vibration level as specified by Inmarsat is as shown in the table below.

Allowable vibration level

Frequency	Level
2 to 10 Hz	2.54 mm Peak Amplitude
10 to 100 Hz	9.8 m/s² Peak Acceleration

- Avoid the location near funnels and stacks; smoke and soot on the radome can lower signal level.
- Separate the antenna unit 5 m from HF, VHF or 27 MHz antenna.

Mounting

The antenna cable is available in lengths of 30 m, 50 m and 100 m (see table below).

Cable length	Type	Remarks
30 m (no armor)	TP5FBAW-5DFB	TNC connector at both ends
30 m (w/armor)	5D-FB-CV-NP	N connector on one end (antenna side)
50 m (w/armor)	8D-FB-CV	
100 m (w/armor)	12D-SFA-CV	

To mount the antenna unit, an exclusive pipe is necessary.

Note 1: Do not shorten these cables. Interference can result, affecting performance.
Note 2: To mount the antenna unit with the optional antenna mounting kit (Type: CP16-03701, Code No.: 004-555-000), see page D-13.

Locally prepare an antenna mast with a ground stud (M6 stainless steel bolt welded to antenna mast) and mounting pipe with threads and plate (See the outline drawing of the mounting plate shown on the next page.) Weld the mounting pipe to the antenna mast. The distance between the stud and the earth terminal on the antenna unit should be within 340 mm, which also is the length of the supplied earth wire.

Downloaded from www.Manualslib.com manuals search engine

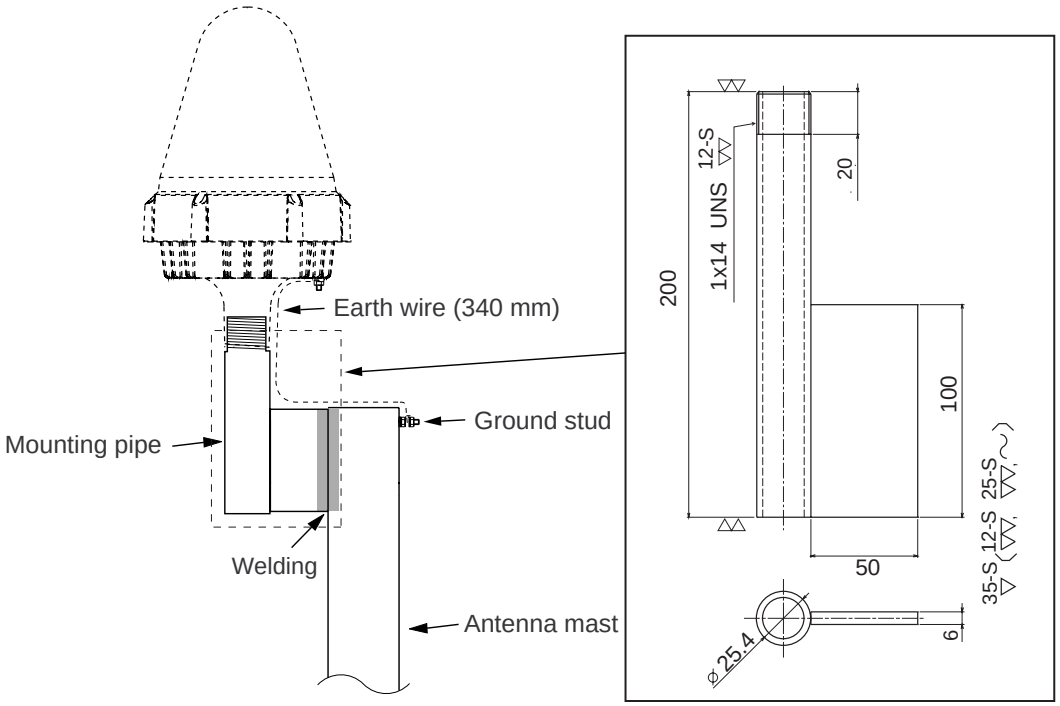

Mounting pipe and antenna mast

For how to wire the antenna cable, see "Installation and Replacement of Antenna Unit", included with the antenna unit.

Downloaded from www.Manualslib.com manuals search engine

1.2 Terminal Unit

Select the following place to install the terminal unit.

- The temperature and humidity should be moderate and stable.
- For maintenance and checking purposes, leave sufficient space at the sides and rear of the unit and leave slack in cables.

Mounting

Tabletop mounting

1. Fix the hanger on a table with four tapping screws (5x20, supplied).

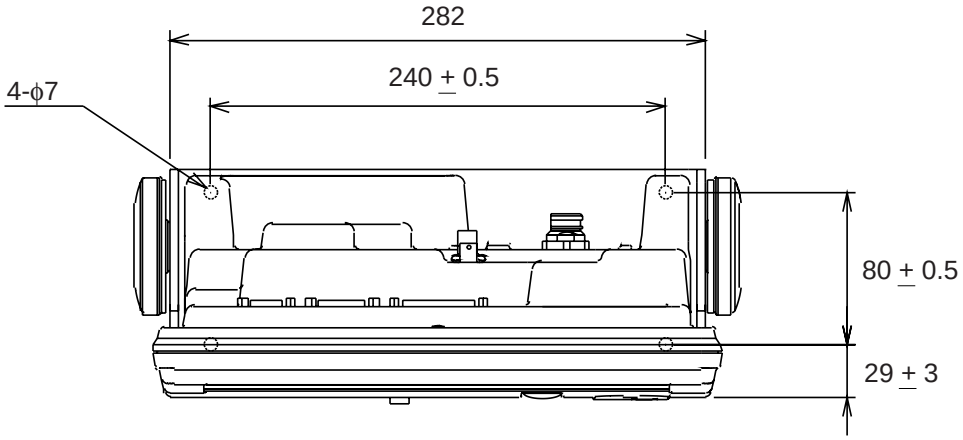

Terminal unit, tabletop mounting

2. Screw knobs and washers to terminal unit loosely.
3. Set the terminal unit to the hanger and tighten knobs.

Flush mounting

Use local supplied pan head screws (M4x20) when the thickness of the bulkhead is from 11 to 14 mm. For bulkhead which exceeds 14 mm in thickness the length of the pan head screws should be bulkhead thickness A +7.8±2 mm. Also the length of B should be max. 8 mm (B≤8 mm).

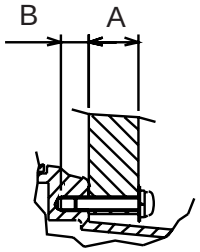

Bulkhead, sectional view

1. Prepare a cutout in the mounting location whose dimensions are as shown on next page.
2. Fix the display unit by six pan head screws M4x20, inserting from the inside of the bulkhead. Refer to the outline drawing at the end of this manual.

Downloaded from www.Manualslib.com manuals search engine

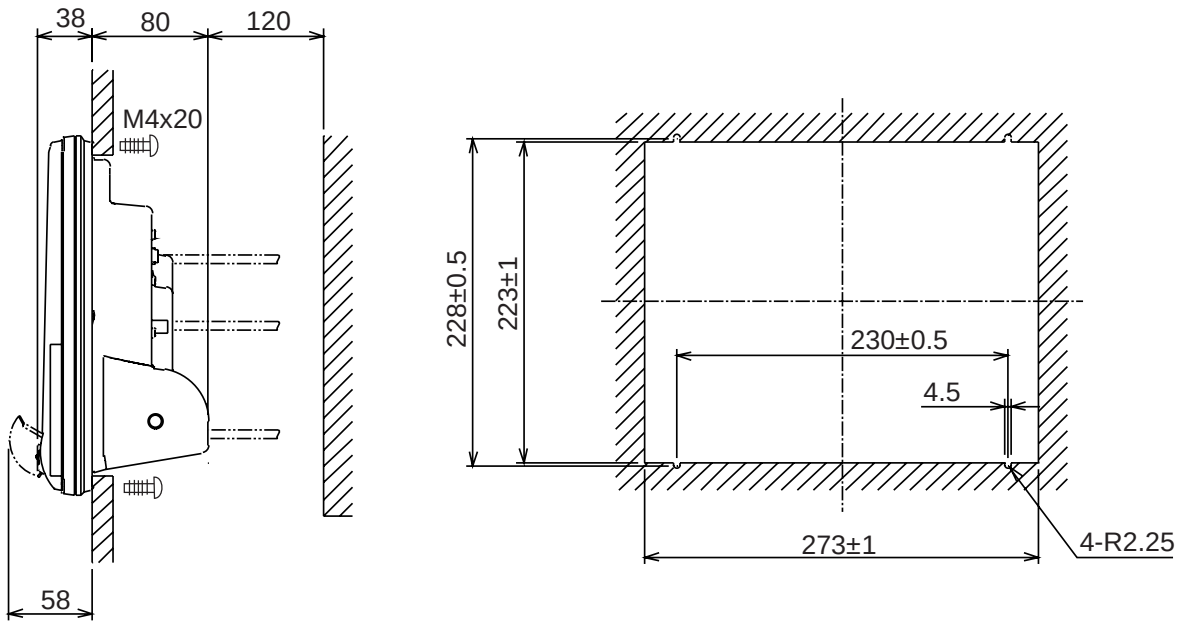

Dimensions for flush mounting

Keyboard

1. Attach the function key label (INM-C 15/12) to the location shown below.

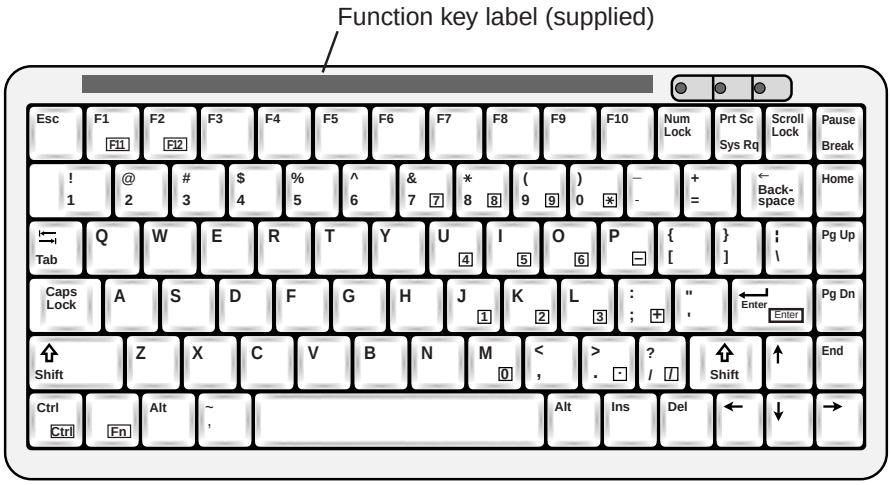

2. Attach four fasteners (small, supplied) to the bottom of the keyboard.
3. Attach four fasteners (large, supplied) to the small fasteners attached in step 3.
4. Peel the paper from four fasteners.
5. Fix the keyboard to the mounting place.

Downloaded from www.Manualslib.com manuals search engine

1.3 Distress Alert/Received Call Unit IC-305/ Alarm Unit IC-306

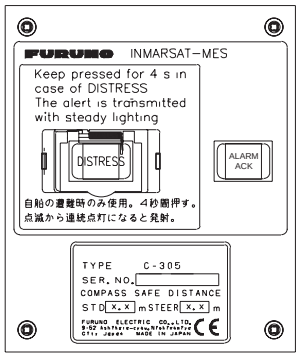

Distress alert/received call unit IC-305

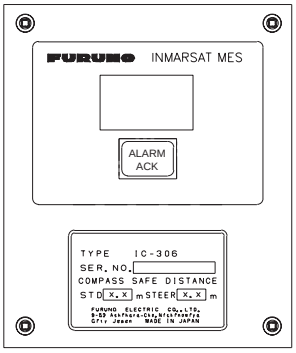

Alarm unit IC-306

Bulkhead mounting

1. Remove four screws from the unit to separate the bottom chassis from the top cover.
2. Fix the bottom chassis to the mounting location with four tapping screws (supplied).
3. Cable can be entered from bottom or rear panel. Select suitable entrance. For rear panel entrance, change the clamp orientation as follows.
   a) Unfasten two screws to remove the cable clamp.
   b) Turn the clamp 90 degrees.
   c) Refasten two screws removed at step a) to fix the clamp.

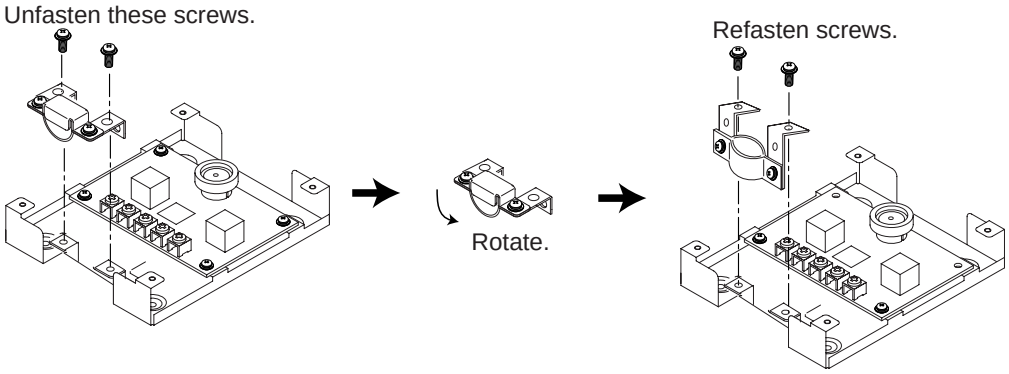

Cable clamp, rotating

4. Run the interconnection cable thru a cable entrance and connect it to terminal board.

Flush mounting

The optional flush mounting kit OP16-27 (Code No. 004-448-000) is required.

Name	Type	Code No.	Qty	Remarks
Fixture	16-018-4201-1	100-317-841	1	
Pan head screw	M3x6	000-800-362	4	
Self-tapping screw	4x16	000-162-605-10	4	

1. Cut out the mounting position referring to the outline drawings at the back of this manual.
2. Fix the unit to the fixture with four pan head screws (supplied as the option kit).
3. Fasten four tapping screws (ø5, supplied as the option kit) to mount the fixture to the mounting position.

Downloaded from www.Manualslib.com manuals search engine

1.4 Printer PP-510 (option)/ EGC Printer PP-505 (option)

PP-510 (option)

Lay the printer on a table and fix it with printer fixtures 1 and 2.
Attach labels appropriately; right side of printer for the compass safety distance label and front of printer for INMAR C label.

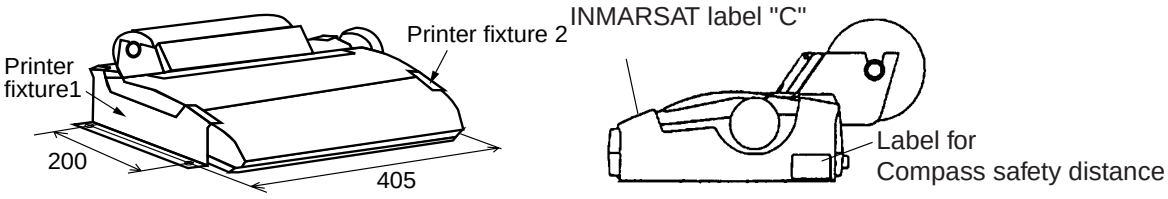

Printer PP-510

PP-505 (option)

1. Fix the hanger on a table with four tapping screws.
2. Screw knobs into printer.
3. Set printer to hanger and tighten knobs.

1.5 AC/DC Power Supply Unit PR-240 (option)

Fix the unit on a table with four tapping screws.

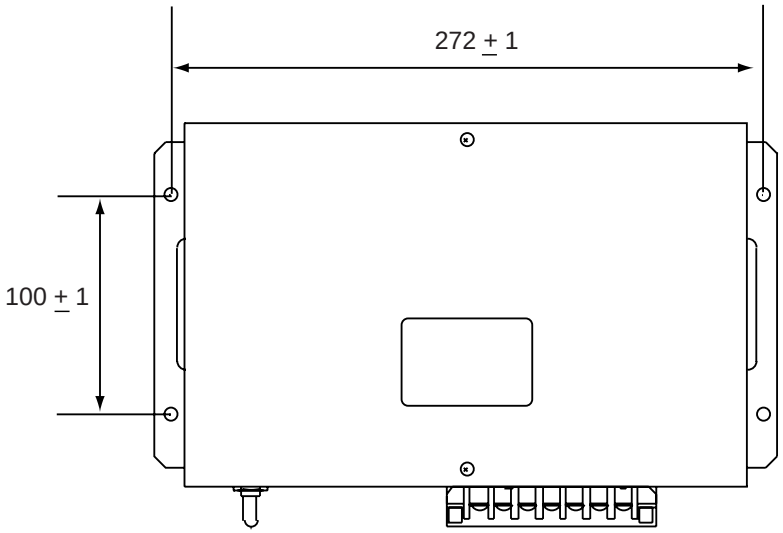

AC/DC power supply unit, dimensions

Downloaded from www.Manualslib.com manuals search engine

1.6 Junction Box IC-315

The junction box IC-315 is connected to the terminal unit by using the cable assy 16S0344 (2 m, attached to the junction box). Install the junction box within 2 m from the terminal unit.

1. Remove four screws from the unit to separate the bottom chassis from the top chassis.
2. Fix the bottom chassis to the mounting location with four tapping screws (4x16: supplied).
3. Connect the cables appropriately referring to Chapter 2.

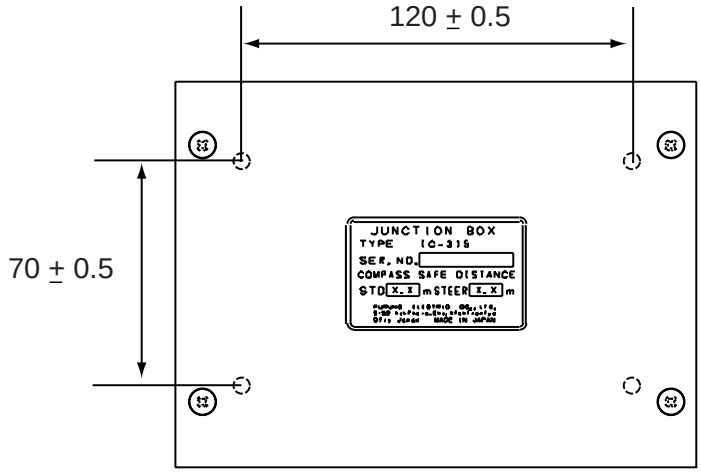

Junction box IC-315, dimensions

Downloaded from www.Manualslib.com manuals search engine

2. WIRING

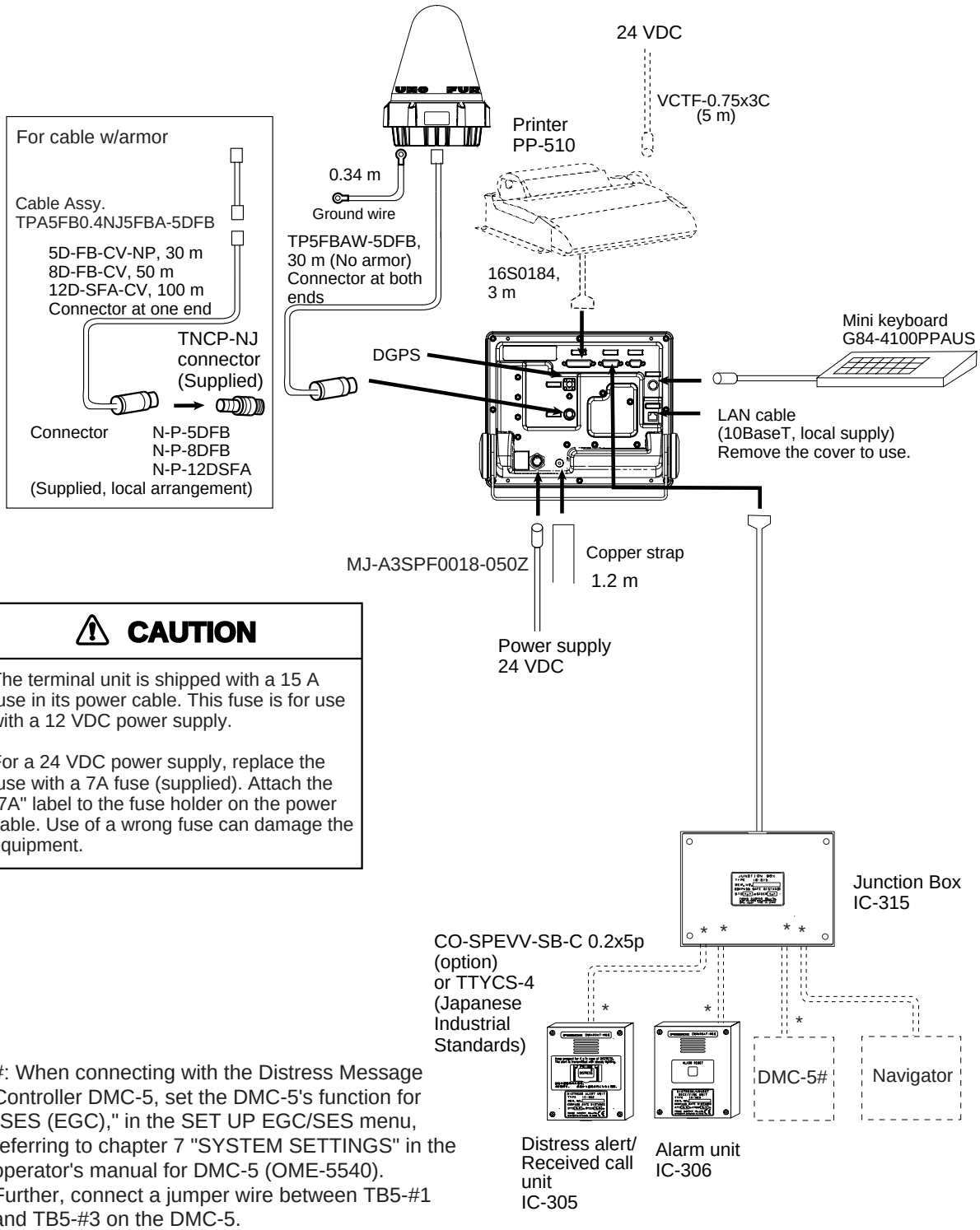

⚠ CAUTION

The terminal unit is shipped with a 15 A fuse in its power cable. This fuse is for use with a 12 VDC power supply.

For a 24 VDC power supply, replace the fuse with a 7A fuse (supplied). Attach the "7A" label to the fuse holder on the power cable. Use of a wrong fuse can damage the equipment.

#: When connecting with the Distress Message Controller DMC-5, set the DMC-5's function for "SES (EGC)," in the SET UP EGC/SES menu, referring to chapter 7 "SYSTEM SETTINGS" in the operator's manual for DMC-5 (OME-5540). Further, connect a jumper wire between TB5-#1 and TB5-#3 on the DMC-5.

Wiring of FELCOM 15

Downloaded from www.Manualslib.com manuals search engine

2.1 Antenna Cable Connector at the Terminal Unit

5D-FB-CV-NP (30 m)

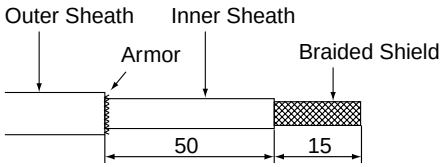

Remove the outer sheath, armor and inner sheath by the dimensions shown.

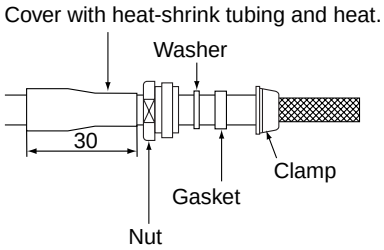

Set the nut, washer, gasket, clamp onto cable as shown.

- Be careful not to damage the braided shield.

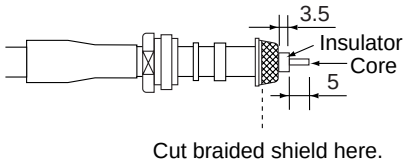

Fold back the braided shield onto the clamp and trim the shield as shown.

Make the length of insulator 3.5 mm and the length of the core 5 mm.
- Be careful not to damage the core.

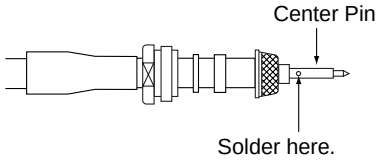

Set the center pin to the core and solder the pin from the hole in the pin.
(Pull the pin with approx. 1 kg of force to check strength of solder joint.)
- Be sure the solder is flush with surface of pin.
- Be sure there is no gap between center pin and insulator. Do not push the center pin into the insulator.
- Do the soldering as quickly as possible so as not to deform the insulator.

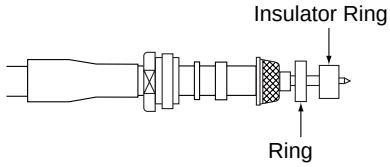

Set the ring and insulator ring onto the cable.

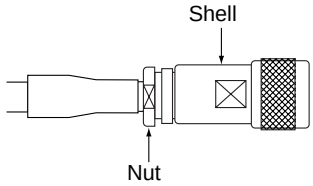

Set the shell to the cable then turn the nut to tighten. (Do not tighten by turning shell.)
- Use a wrench or the like to tighten the nut securely.

How to fabricate antenna cable 5D-FB-CV-NP

Downloaded from www.Manualslib.com manuals search engine

8D-FB-CV (50 m)

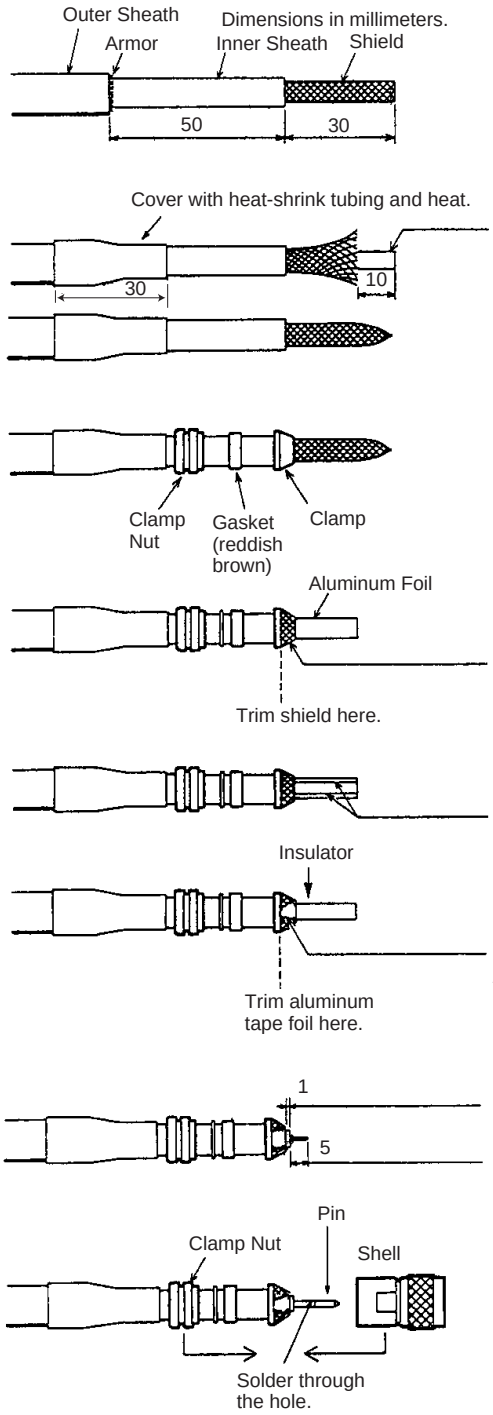

Remove outer sheath and armor by the dimensions shown left.
Expose inner sheath and shield by the dimensions shown left.

Remove insulator and core by 10 mm.

Twist shield end.

Slip on clamp nut, gasket and clamp as shown left.

Fold back shield over clamp and trim.

Cut aluminum foil at four places, 90° from one another.

Fold back aluminum tape foil onto shield and trim.

Expose the insulator by 1 mm.

Expose the insulator by 5 mm.

Slip the pin onto the conductor. Solder them together through the hole on the pin.

Insert the pin into the shell. Screw the clamp nut into the shell.
(Tighten by turning the clamp nut. Do not tighten by turning the shell.)

How to fabricate antenna cable 8D-FB-CV

Downloaded from www.Manualslib.com manuals search engine

12D-SFA-CV (100 m)

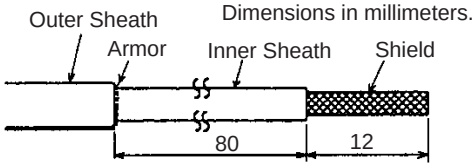

Remove outer sheath and armor by the dimensions shown left.
Expose inner sheath and shield by the dimensions shown left.

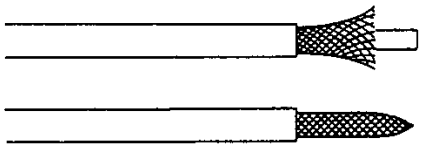

Twist shield end.

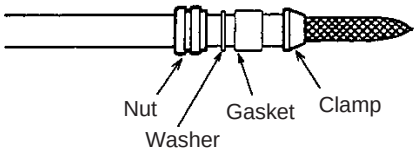

Slip on clamp nut, gasket and clamp as shown left.

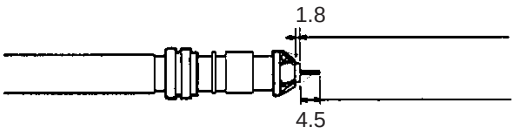

Expose the insulator by 1.8 mm.

Expose the core by 4.5 mm.

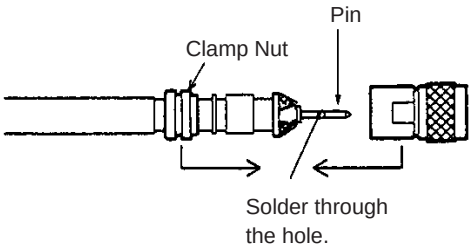

Slip the pin onto the conductor. Solder them together through the hole on the pin.

Insert the pin into the shell. Screw the clamp nut into the shell.
(Tighten by turning the clamp nut. Do not tighten by turning the shell.)

How to fabricate antenna cable 12D-SFA-CV

Downloaded from www.Manualslib.com manuals search engine

2.2 Distress Alert/Received Call Unit IC-305

Use the installation material CP16-02201 to connect the distress alert IC-305. The optional CO-SPEVV-SB-C 0.2x5P cable or JIS cable (Japan Industrial Standards) TTYCS-4 or equivalent are available to connect with the junction box IC-305. Select the cable clamp attached depending on the diameter of cable, and fix the armor of cable with the clamp.

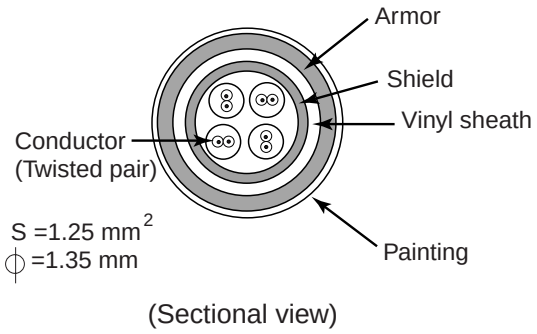

TTYCS-4 cable, sectional view

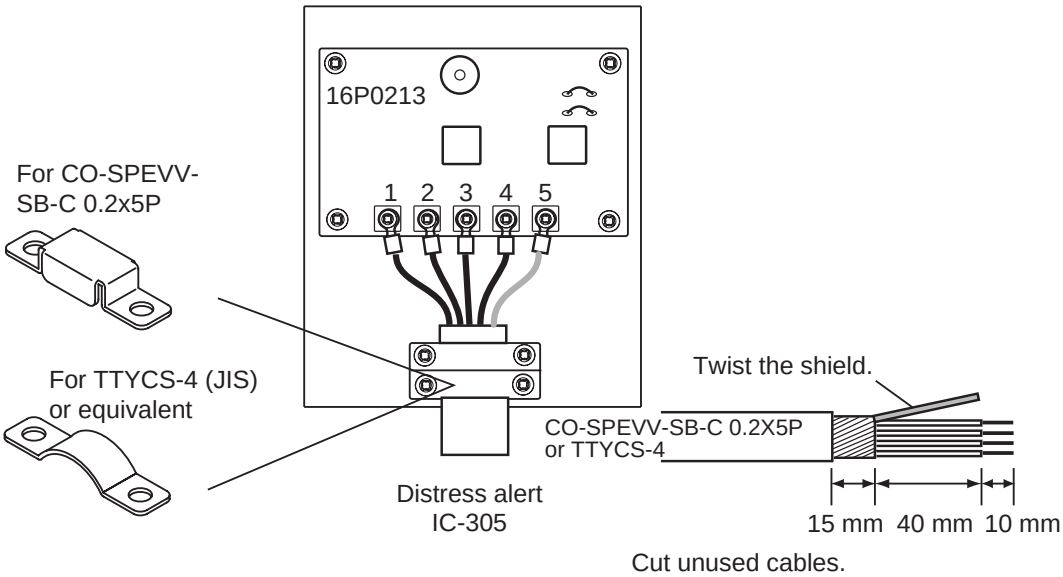

Wiring of distress alert IC-305

Downloaded from www.Manualslib.com manuals search engine

2.3 Alarm Unit IC-306

Maximum three alarm units can be connected to the junction box IC-315 in parallel. To distinguish the incoming indictors, set jumper wires for the second alarm unit as below. For connection, refer to the “2.2 Distress Alert/Received Call Unit IC-305.”

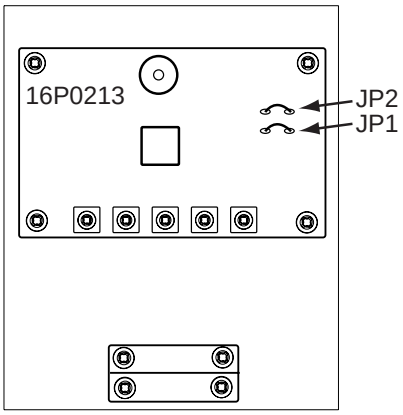

Alarm unit IC-306

	No. 1 (default setting)	No. 2	No. 3
JP1	Open	Open	Short
JP2	Short	Open	Open

Downloaded from www.Manualslib.com manuals search engine

2.4 Junction Box IC-315

Use the junction box IC-315 to connect the distress alert/received call unit IC-305 and other unit (max. four units) to the terminal unit.
Unfasten four screws to remove the box cover to connect cables.

For connection, use the optional 5 pair cable CO-SPEVV-SB-C 0.2x5P, JIS cable (Japan Industrial Standards) TTYCS-4 or equivalent. When using the CO-SPEVV-SB-C 0.2x5P cable, replace the cable clamp with the cable clamp 16-018-6008-1, supplied with IC-315.

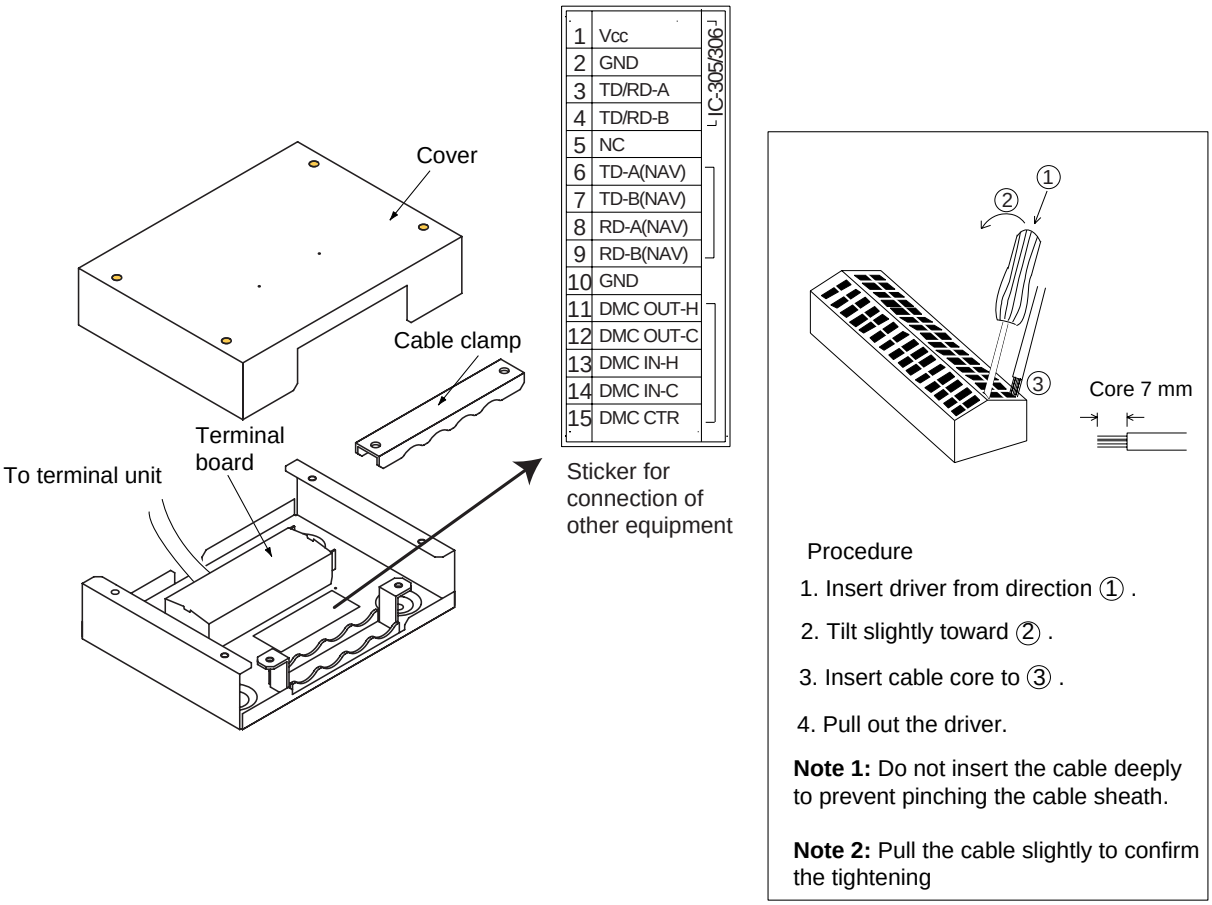

Junction Box IC-315

Input/output sentences

The following sentences can be input/output with the navigator connected.

Input sentences	Output sentences
GGA, GLL, VTG, WPL, RMA, RMB, RMC, MTW, DBT, BWC, BWR, VDR, ZDA	GGA, ZDA, GLL, VTG, RMC, GSV

Downloaded from www.Manualslib.com manuals search engine

3. INITIAL SETTINGS

3.1 Setting the IMN (INMARSAT MOBILE NO.)

After the wiring, set your IMN (Inmarsat Mobile No.) as below.

1. Turn the power on.
2. Press the function key [F8] to show the Setup menu.

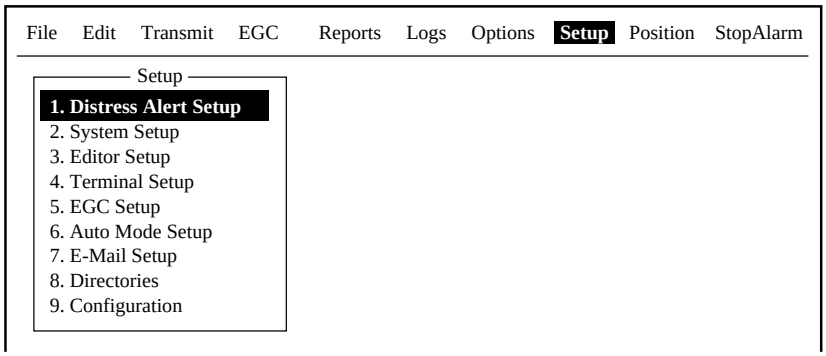

Setup menu

3. Press [2] key to display the System Setup menu.

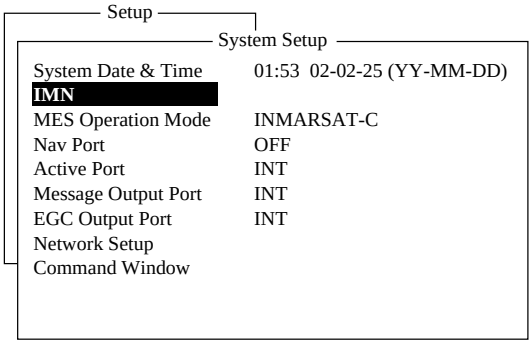

System Setup menu

4. Confirm that the IMN is selected, and then press the [Enter] key.
   The entering field appears.
5. Key in your IMN.
6. Press the [Enter] key.
7. Press the [Esc] key to disappear the entering field.
8. Press the [Enter] key.

To clear the IMN, press [I] [M] [N] in order while pressing the [Alt] key down at step 5.

Downloaded from www.Manualslib.com manuals search engine

3.2 Setting for External Equipment

The FELCOM 15 system had been set to accommodate to distress alert/received call unit IC-305, up to three alarm units IC-306 and distress message controller DMC-5 at factory. If less than three units are connected, change the setting to OFF as below.

1. Press the [F8] key to show the Setup menu.
2. Press the [2] key to show the System Setup menu.
3. Press the [↓] key to select “Command Window”, and then press [Enter] key to show the Command Window screen.
4. Referring to the service manual for FELOM15, fill in the “Enter JOB No.:” and then press the [Enter] key.
5. As similar to step 4, fill in the “PASSWORD:”, and then press the [Enter] key.
   [Main Menu] is highlighted.
6. Press the [1] and [Enter] keys in order.

```
Setup
System Setup
System Date & Time      01:53  02-02-25 (YY-MM-DD)
IMN
Command Window
[ Main Menu ]
1. Remote Box Setup
2. Internal GPS Setup
Enter JOB No.: 1

[ Remote Box Setup ]
1. DMC              ON
2. IC-305           ON
3. IC-306 No.1      ON
4. IC-306 No.2      ON
5. IC-306 No.3      ON
E: Exit
Enter No.:
```

Command Window screen

7. Press the number key for unit not connected, and then press the [Enter] key.
   For example, press the [1] and [Enter] keys when the DMC-5 is not connected.

```
[ DMC ]
1. ON
2. OFF      E: Exit
Enter No.:
```

Setting window for DMC-5

8. Press the [2] key, and the [Enter] key.
   Instead of a numeric key, press the [E] key to return to Remote Box Setup menu.
9. Repeat steps 7 to 8 for other unit not connected.
10. Press the [Esc] key several times to close the menu.

Downloaded from www.Manualslib.com manuals search engine

4. INSTALLATION OF GPS BOARD (OPTION)

This chapter provides the procedure for the installation of the GPS board (in the terminal unit), which provides GPS position information.

Name: GPS board
Type: OP16-47
Code No.: 000-017-110

Name	Type	Code No.	Qty	Remarks
GPS board	16P0246	004-656-550	1	
Pan head screw	M3x8	000-163-190-10	3	

Note: Use anti-static gloves to treat board.

1. Unfasten 18 screws, six spacers and three nuts to remove the terminal unit cover.

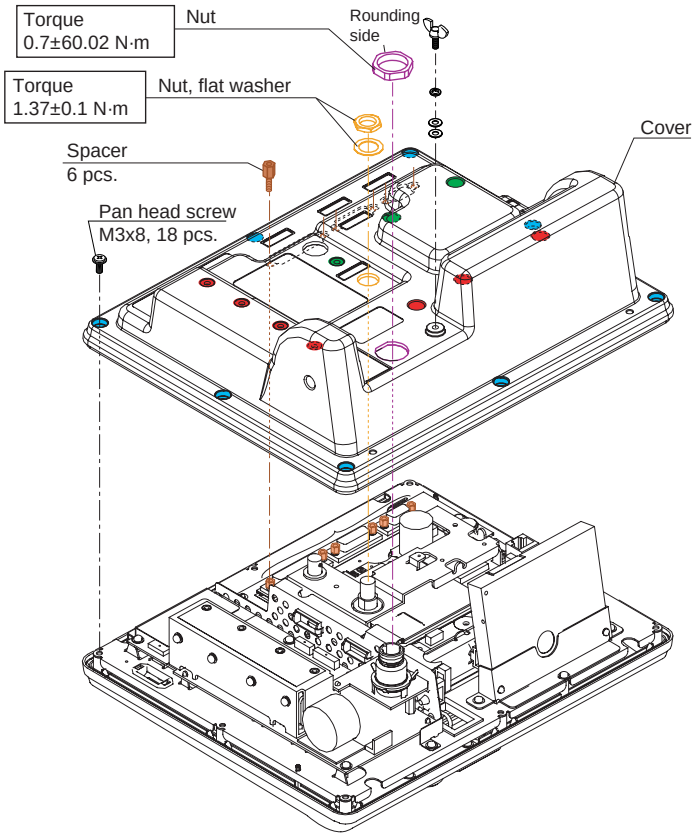

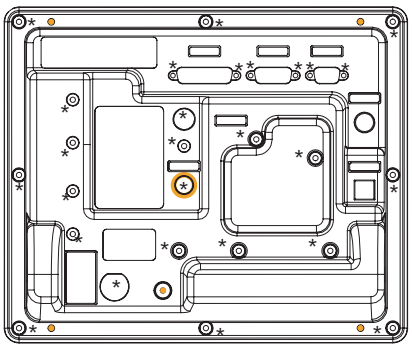

*: Remove

Terminal unit, cover removed

Downloaded from www.Manualslib.com manuals search engine

2. Unfasten four pan head screws (M3x8) to remove the RF cover (S).
3. Fasten three pan head screws (M3x8, supplied with the kit) to attach the GPS board to the RF cover.
4. Attach the 7P connector from the RF cover to the JI on the GPS board.

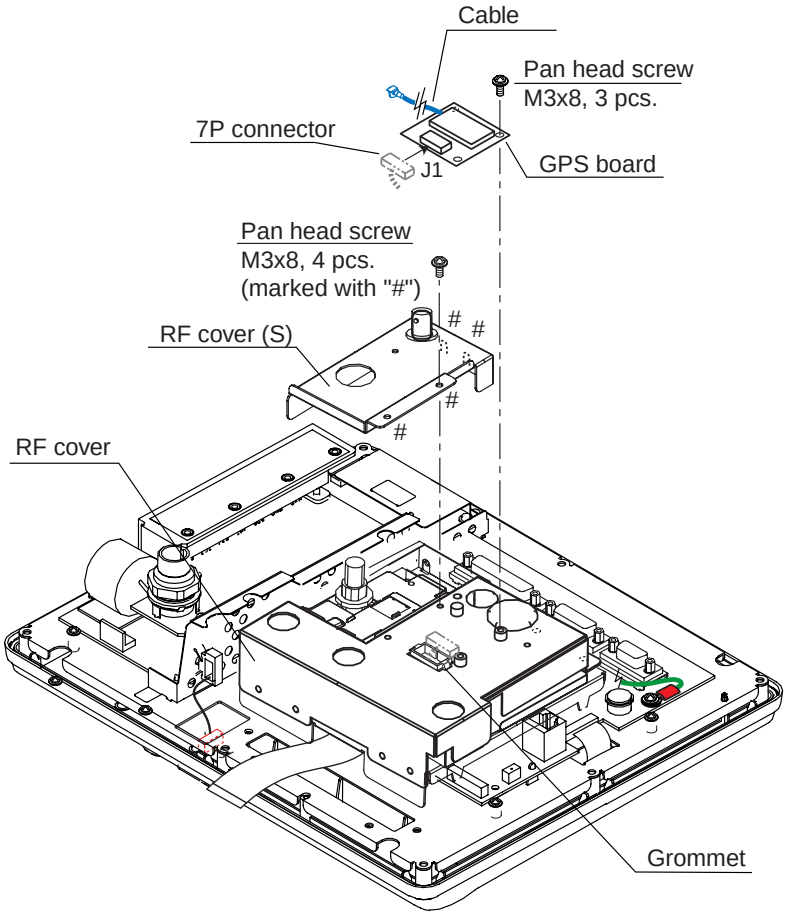

Removing RF Cover (S)/Fixing GPS Board

5. Pass the cable from the GPS board through the hole on the RF cover, and then connect it to J4 on the RF CON/CPU board.

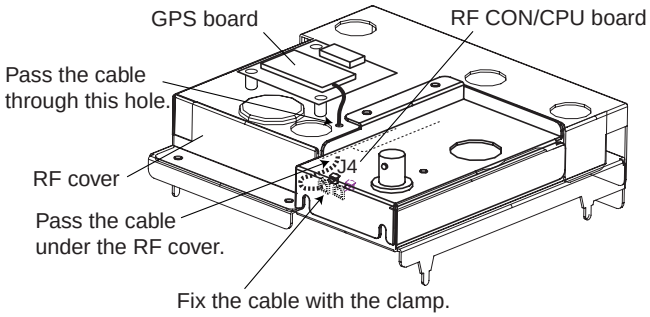

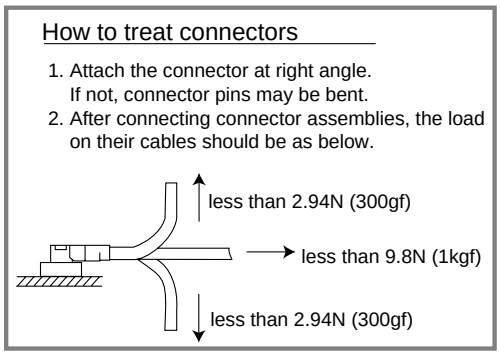

Fasten the cable at the clamp next to the J4 connector.

6. Remount the RF cover (S) using four pan head screws (M3x8) unfastened at step 2.

Downloaded from www.Manualslib.com manuals search engine

7. Reassemble the terminal unit as below.
   a) Fasten six spacers ⓐ by hand tentatively.
   b) Fasten eight pan head screws ⓑ tightly.
   c) Fasten six spacers ⓐ by box driver tightly.
   d) Fasten other screws and washers to complete.

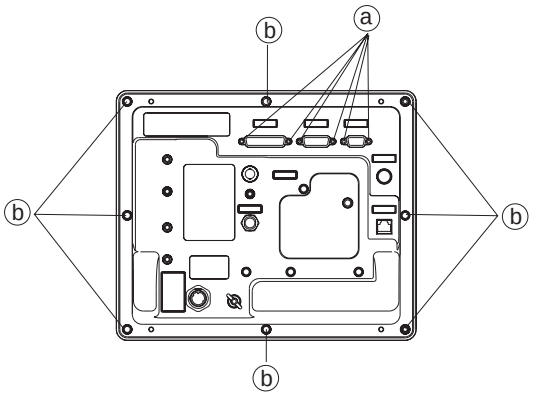

Terminal unit, rear view

Downloaded from www.Manualslib.com manuals search engine

5. CHANGING POWER SUPPLY SPECIFICATIONS

The AC-DC power supply PR-240 is shipped ready for connection to a 200-230 VAC ship's mains. If the ship's mains is 100 VAC-115 VAC, change the tap connection and terminal board connection as below. Attach a label supplied as accessories to the front panel according to the ship's mains.

Ship's mains	Tap connection	Terminal board	Label
200-230 VAC	SEL 230 V	Below (a)	200-230 VAC 2.2-1.7 A 1 ϕ 50/60 Hz
100-115 VAC	SEL 115 V	Below (b)	100-115 VAC 3.2-2.6 A 1 ϕ 50/60 Hz

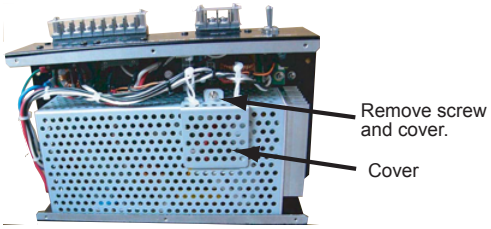

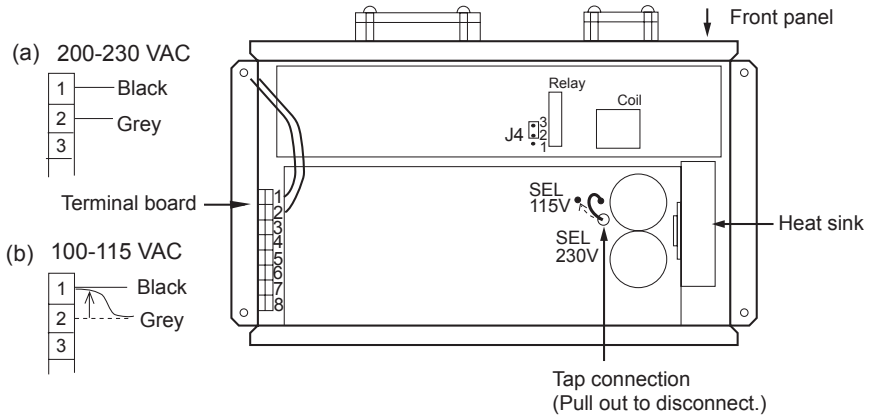

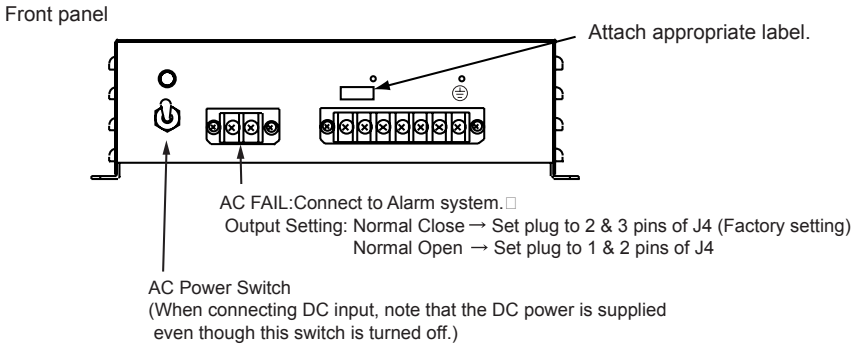

Note: The DC output load must be less than 8A.

Downloaded from www.Manualslib.com manuals search engine

Downloaded from www.Manualslib.com manuals search engine

PACKING LIST IC-215-J*/IC-215-E*

16AK-X-9851-6 1/1

NAME	OUTLINE	DESCRIPTION/CODE No.	Q'TY
ユニット UNIT			
ﾀｰﾐﾅﾙﾕﾆｯﾄ TERMINAL UNIT	300 270	IC-215* 000-043-432-00 **	1
予備品 SPARE PARTS SP16-01301			
予備品 SPARE PARTS		SP16-01301 (IC-215用) 004-439-370-00	1
付属品 ACCESSORIES FP16-00600			
ﾌﾛｯﾋﾟｰﾃﾞｨｽｸ組品 FLOPPY DISK	98 97	FP16-00601 004-439-400-00	1
ﾐﾆｷｰﾎﾞｰﾄﾞ KEYBOARD	282 132	G84-4100PPAUS 000-172-018-10	1
工事材料 INSTALLATION MATERIALS CP16-02301			
工事材料 INSTALLATION MATERIALS		CP16-02301 004-439-380-00	1
工事材料 INSTALLATION MATERIALS CP16-02302			
工事材料 INSTALLATION MATERIALS		CP16-02302 004-439-390-00	1
図書 DOCUMENT			
ｱﾌﾟﾘｹｰｼｮﾝﾌｫｰﾑ REGISTRATION FOR SERVICE ACTIVATION	210 297	J5-950010-* ﾜ/ｴｲ 000-807-330-1*	1
ﾋｭｰｽﾞ変更のお願い NOTICE FOR FUSE REPLACEMENT	210 297	C52-00206-* 000-147-004-1*	1

NAME	OUTLINE	DESCRIPTION/CODE No.	Q'TY
機器引渡し前の注意 BEFORE DELIVERING TO OWNER	210 297	C52-00201-* ﾜ/ｴｲ 000-809-353-1*	1
取扱説明書 OPERATOR'S MANUAL	210 297	OM*-56350-* 000-809-348-1* **	1
取扱説明書 OPERATOR'S MANUAL	210 297	OM*-56351-* 000-150-358-1* **	1
装備要領書 INSTALLATION MANUAL	210 297	IM*-56350-* 000-809-350-1* **	1
遭難通信要領 DISTRESS COMMUNICATION	210 297	TIC-56350-* ﾜ/ｴｲ 000-809-352-1*	1

1.ｺｰﾄﾞ番号末尾の[**]は、選択品の代表型式/ｺｰﾄﾞを表します。
CODE NUMBER ENDING WITH "**" INDICATES THE CODE NUMBER OF REPRESENTATIVE MATERIAL

型式/ｺｰﾄﾞ番号が2段の場合、下段より上段に代わる過渡期品であり、どちらかが入っています。 なお、品質は変わりません。

TWO TYPES AND CODES MAY BE LISTED FOR AN ITEM. THE LOWER PRODUCT MAY BE SHIPPED IN PLACE OF THE UPPER PRODUCT. QUALITY IS THE SAME.

（略図の寸法は、参考値です。 DIMENSIONS IN DRAWING FOR REFERENCE ONLY.）

C5635-Z01-D

Downloaded from www.Manualslib.com manuals search engine

PACKING LIST

16AK-X-9855 -3 1/1

A-2

IC-305

NAME	OUTLINE	DESCRIPTION/CODE No.	Q'TY
ユニット UNIT			
遭難警報器 DISTRESS ALERT UNIT	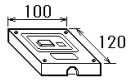	IC-305 000-043-427-00 **	1
工事材料 INSTALLATION MATERIALS		**CP16-02201**	
+ﾄﾗｽﾀｯﾋﾟﾝﾈｼﾞ 1ｼｭ SELF-TAPPING SCREW	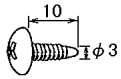	3X10 SUS304 000-162-604-10	4
圧着端子 CRIMP-ON LUG	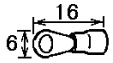	FV1.25-3(LF) 000-166-756-10	4
圧着端子 CRIMP-ON LUG	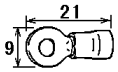	FV2-3 000-157-246-10	1
図書 DOCUMENT			
IC-305/307引き渡し前の注意 BEFORE DELIVERING TO OWNER	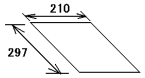	C52-00202-* 000-809-354-1*	1 (*1)

1.(*1)の＊＊＊＊は、有り･無しの仕様が有ります。
AVAILABLE WITH OR WITHOUT ***** UNIT.

型式/ｺｰﾄﾞ番号が2段の場合、下段より上段に代わる過渡期品であり、どちらかが入っています。 なお、品質は変わりません。

TWO TYPES AND CODES MAY BE LISTED FOR AN ITEM. THE LOWER PRODUCT MAY BE SHIPPED IN PLACE OF THE UPPER PRODUCT. QUALITY IS THE SAME.

（略図の寸法は、参考値です。 DIMENSIONS IN DRAWING FOR REFERENCE ONLY.）

C5635-Z04-C

PACKING LIST

16AK-X-9856 -3 1/1

A-3

IC-306

NAME	OUTLINE	DESCRIPTION/CODE No.	Q'TY
ユニット UNIT			
着信指示器 ALARM UNIT	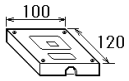	IC-306 000-043-429-00	1
工事材料 INSTALLATION MATERIALS		**CP16-02201**	
+ﾄﾗｽﾀｯﾋﾟﾝﾈｼﾞ 1ｼｭ SELF-TAPPING SCREW	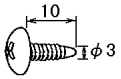	3X10 SUS304 000-162-604-10	4
圧着端子 CRIMP-ON LUG	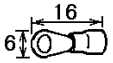	FV1.25-3(LF) 000-166-756-10	4
圧着端子 CRIMP-ON LUG	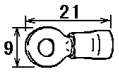	FV2-3 000-157-246-10	1

型式/ｺｰﾄﾞ番号が2段の場合、下段より上段に代わる過渡期品であり、どちらかが入っています。 なお、品質は変わりません。

TWO TYPES AND CODES MAY BE LISTED FOR AN ITEM. THE LOWER PRODUCT MAY BE SHIPPED IN PLACE OF THE UPPER PRODUCT. QUALITY IS THE SAME.

（略図の寸法は、参考値です。 DIMENSIONS IN DRAWING FOR REFERENCE ONLY.）

C5635-Z05-C

Downloaded from www.Manualslib.com manuals search engine

FURUNO

CODE NO.		16AK-X-9404 -4
TYPE		1/1

工事材料表

INSTALLATION MATERIALS

IC-115

番号 NO.	名称 NAME	略図 OUTLINE	型名／規格 DESCRIPTIONS	数量 Q'TY	用途／備考 REMARKS
1	ｹｰﾌﾞﾙ組品 CABLE ASSY.	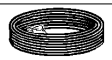 L=100M	12D-SFA-CV *100M* CODE NO. 000-138-866-00	1	選択 TO BE SELECTED
2	ｱﾝﾃﾅｹｰﾌﾞﾙ組品 CABLE ASSY.	 L=50M	8D-FB-CV *50M* CODE NO. 000-168-241-10	1	選択 TO BE SELECTED
3	ｹｰﾌﾞﾙ組品 CABLE ASSY.	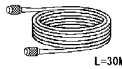 L=30M	TP5FBAW-5DFB 30M CODE NO. 000-159-523-11	1	選択 TO BE SELECTED
4	同軸ｹｰﾌﾞﾙ ARMOURED COAXIAL CABLE	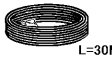 L=30M	5D-FB-CV-NP *30M* CODE NO. 000-173-676-10	1	選択 TO BE SELECTED

型式/ｺｰﾄﾞ番号が２段の場合、下段より上段に代わる過渡期品であり、どちらかが入っています。　なお、品質は変わりません。

TWO TYPES AND CODES MAY BE LISTED FOR AN ITEM. THE LOWER PRODUCT MAY BE SHIPPED IN PLACE OF THE UPPER PRODUCT.
QUALITY IS THE SAME.
（略図の寸法は、参考値です。　DIMENSIONS IN DRAWING FOR REFERENCE ONLY.）

FURUNO ELECTRIC CO., LTD.

C5635-M04-E

FURUNO

CODE NO.	004-439-060-00	16AK-X-9401 -9
TYPE	CP16-02101	1/1

工事材料表

INSTALLATION MATERIALS

番号 NO.	名称 NAME	略図 OUTLINE	型名／規格 DESCRIPTIONS	数量 Q'TY	用途／備考 REMARKS
1	ｲﾗｯｸｽｽﾘｰﾌﾞ SCM2 INSULATION SLEEVE	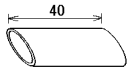 	07-1220 ｸﾛ *40MM* CODE NO. 000-165-300-10	1	
2	ｹｰﾌﾞﾙ保護材 CABLE PROTECTION MATERIAL	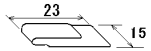 	16-018-1251-1 ROHS CODE NO. 100-298-111-10	1	
3	ｺﾝﾍﾞｯｸｽ CABLE TIE	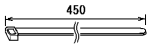 	CV-450B CODE NO. 000-173-169-10	5	
4	ﾌﾞﾁﾙｺﾞﾑﾃｰﾌﾟ SELF-BONDING TAPE	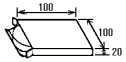 	NO.15 CODE NO. 000-835-526-00	1	
5	ｹｰﾌﾞﾙ組品 CABLE ASSY.	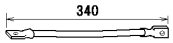 	RW-4747 RW-4747-1 CODE NO. 000-566-000-12 000-566-000-01	1	
6	ｹﾐｼｰﾙ SILICON RUBBER	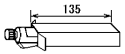 	S-8400W ｱﾙﾐﾁｭｰﾌﾞ 50G CODE NO. 000-158-483-10	1	

型式/ｺｰﾄﾞ番号が２段の場合、下段より上段に代わる過渡期品であり、どちらかが入っています。　なお、品質は変わりません。

TWO TYPES AND CODES MAY BE LISTED FOR AN ITEM. THE LOWER PRODUCT MAY BE SHIPPED IN PLACE OF THE UPPER PRODUCT.
QUALITY IS THE SAME.
（略図の寸法は、参考値です。　DIMENSIONS IN DRAWING FOR REFERENCE ONLY.）

FURUNO ELECTRIC CO., LTD.

C5635-M01-K

Downloaded from www.Manualslib.com manuals search engine

FURUNO

CODE NO.	004-439-070-00	16AK-X-9402 -10
TYPE	CP16-02111	1/1

工事材料表

INSTALLATION MATERIALS

番号 NO.	名称 NAME	略図 OUTLINE	型名／規格 DESCRIPTIONS		数量 Q'TY	用途／備考 REMARKS
1	ｲﾗｯｸｽｽﾘｰﾌﾞ SCM2 INSULATION SLEEVE	40	07-1220 ｸﾛ *40MM*		1	
			CODE NO.	000-165-300-10		
2	ｹｰﾌﾞﾙ保護材 CABLE PROTECTION MATERIAL	23, 15	16-018-1251-1 ROHS		1	
			CODE NO.	100-298-111-10		
3	ｺﾝﾍﾞｯｸｽ CABLE TIE	450	CV-450B		5	
			CODE NO.	000-173-169-10		
4	ﾌﾞﾁﾙｺﾞﾑﾃｰﾌﾟ SELF-BONDING TAPE	100, 100, 20	NO.15		1	
			CODE NO.	000-835-526-00		
5	ｺﾈｸﾀ(N) COAXIAL CONNECTOR *N TYPE*	40, φ21	N-P-8DFB-CF		1	
			CODE NO.	000-156-918-10		
6	ｹｰﾌﾞﾙ組品 CABLE ASSY.	340	RW-4747		1	
			RW-4747-1			
			CODE NO.	000-566-000-12		
				000-566-000-01		
7	ｹﾐｼｰﾙ SILICON RUBBER	135	S-8400W ｱﾙﾐﾁｭｰﾌﾞ50G		1	
			CODE NO.	000-158-483-10		
8	ｺﾈｸﾀ(TNC-N) COAXIAL CONNECTOR ADAPTOR	36.5, φ19	TNCP-NJ		1	
			CODE NO.	000-156-599-10		
9	ｹｰﾌﾞﾙ組品 CABLE ASSEMBLY	L=400	TPA5FB0.4NJ5FBA-5DFB		1	
			CODE NO.	000-172-382-10		

型式/ｺｰﾄﾞ番号が２段の場合、下段より上段に代わる過渡期品であり、どちらかが入っています。　なお、品質は変わりません。

TWO TYPES AND CODES MAY BE LISTED FOR AN ITEM. THE LOWER PRODUCT MAY BE SHIPPED IN PLACE OF THE UPPER PRODUCT. QUALITY IS THE SAME.
（略図の寸法は、参考値です。　DIMENSIONS IN DRAWING FOR REFERENCE ONLY.）

FURUNO ELECTRIC CO., LTD.

C5635-M02-L

FURUNO

CODE NO.	004-439-080-00	16AK-X-9403 -10
TYPE	CP16-02121	1/1

工事材料表

INSTALLATION MATERIALS

番号 NO.	名称 NAME	略図 OUTLINE	型名／規格 DESCRIPTIONS		数量 Q'TY	用途／備考 REMARKS
1	ｲﾗｯｸｽｽﾘｰﾌﾞ SCM2 INSULATION SLEEVE	40	07-1220 ｸﾛ *40MM*		1	
			CODE NO.	000-165-300-10		
2	ｹｰﾌﾞﾙ保護材 CABLE PROTECTION MATERIAL	23, 15	16-018-1251-1 ROHS		1	
			CODE NO.	100-298-111-10		
3	ｺﾝﾍﾞｯｸｽ CABLE TIE	450	CV-450B		5	
			CODE NO.	000-173-169-10		
4	ﾌﾞﾁﾙｺﾞﾑﾃｰﾌﾟ SELF-BONDING TAPE	100, 100, 20	NO.15		1	
			CODE NO.	000-835-526-00		
5	ｺﾈｸﾀ(N) CONNECTOR	57.9, φ25	N-SP-12DSFA-CF		1	
			CODE NO.	000-170-646-10		
6	ｹｰﾌﾞﾙ組品 CABLE ASSY.	340	RW-4747		1	
			RW-4747-1			
			CODE NO.	000-566-000-12		
				000-566-000-01		
7	ｹﾐｼｰﾙ SILICON RUBBER	135	S-8400W ｱﾙﾐﾁｭｰﾌﾞ50G		1	
			CODE NO.	000-158-483-10		
8	ｺﾈｸﾀ(TNC-N) COAXIAL CONNECTOR ADAPTOR	36.5, φ19	TNCP-NJ		1	
			CODE NO.	000-156-599-10		
9	ｹｰﾌﾞﾙ組品 CABLE ASSEMBLY	L=400	TPA5FB0.4NJ5FBA-5DFB		1	
			CODE NO.	000-172-382-10		

型式/ｺｰﾄﾞ番号が２段の場合、下段より上段に代わる過渡期品であり、どちらかが入っています。　なお、品質は変わりません。

TWO TYPES AND CODES MAY BE LISTED FOR AN ITEM. THE LOWER PRODUCT MAY BE SHIPPED IN PLACE OF THE UPPER PRODUCT. QUALITY IS THE SAME.
（略図の寸法は、参考値です。　DIMENSIONS IN DRAWING FOR REFERENCE ONLY.）

FURUNO ELECTRIC CO., LTD.

C5635-M03-L

Downloaded from www.Manualslib.com manuals search engine

FURUNO

CODE NO.	001-101-960-00	16AK-X-9423 -1
TYPE	CP16-05001	1/1

工事材料表

INSTALLATION MATERIALS

IC-115/116

番号 NO.	名称 NAME	略図 OUTLINE	型名／規格 DESCRIPTIONS		数量 Q'TY	用途／備考 REMARKS
1	ｲﾗｯｸｽｽﾘｰﾌﾞ SCM2 INSULATION SLEEVE	40	07-1220 ｸﾛ *40MM*	CODE NO. 000-165-300-10	1	
2	ｹｰﾌﾞﾙ保護材 CABLE PROTECTION MATERIAL	23, 15	16-018-1251-1 ROHS	CODE NO. 100-298-111-10	1	
3	ｺﾝﾍﾞｯｸｽ CABLE TIE	450	CV-450B	CODE NO. 000-173-169-10	5	
4	ﾌﾞﾁﾙｺﾞﾑﾃｰﾌﾟ SELF-BONDING TAPE	100, 100, 20	NO.15	CODE NO. 000-835-526-00	1	
5	ｺﾈｸﾀ(N) CONNECTOR	44, φ17.5	N-P-5DFB-1-CF	CODE NO. 000-156-917-10	1	
6	ｹｰﾌﾞﾙ組品 CABLE ASSY.	340	RW-4747 RW-4747-1	CODE NO. 000-566-000-12 000-566-000-01	1	
7	ｹﾐｼｰﾙ SILICON RUBBER	135	S-8400W ｱﾙﾐﾁｭｰﾌﾞ 50G	CODE NO. 000-158-483-10	1	
8	ｺﾈｸﾀ(TNC-N) COAXIAL CONNECTOR ADAPTOR	36.5, φ19	TNCP-NJ	CODE NO. 000-156-599-10	1	
9	ｹｰﾌﾞﾙ組品 CABLE ASSEMBLY	L=400	TPA5FB0.4NJ5FBA-5DFB	CODE NO. 000-172-382-10	1	

型式/ｺｰﾄﾞ番号が２段の場合、下段より上段に代わる過渡期品であり、どちらかが入っています。　なお、品質は変わりません。

TWO TYPES AND CODES MAY BE LISTED FOR AN ITEM. THE LOWER PRODUCT MAY BE SHIPPED IN PLACE OF THE UPPER PRODUCT. QUALITY IS THE SAME.

（略図の寸法は、参考値です。　DIMENSIONS IN DRAWING FOR REFERENCE ONLY.）

FURUNO ELECTRIC CO., LTD.

C5635-M19-B

FURUNO

CODE NO.	004-441-780-00	16AC-X-9420 -7
TYPE	CP16-01200	1/1

工事材料表

INSTALLATION MATERIALS

番号 NO.	名称 NAME	略図 OUTLINE	型名／規格 DESCRIPTIONS		数量 Q'TY	用途／備考 REMARKS
1	ﾊﾘﾏｰｸ(INMAR) LABEL (INMAR)	60, 20	16-007-6919-0 ROHS	CODE NO. 100-217-010-10	1	
2	ﾊﾘﾏｰｸ STICKER	62, 9	16-007-6927-0 ROHS	CODE NO. 100-222-480-10	1	COMPASS SAFE DISTANCE
3	ｹｰﾌﾞﾙ組品 POWER CABLE ASSY.	L=5M	16S0084-0	CODE NO. 000-159-709-10	1	
4	ｹｰﾌﾞﾙ組品 CABLE ASSEMBLY	L=3M	57FE-17JE-BC10PL3000	CODE NO. 000-174-473-10	1	ﾀｰﾐﾅﾙﾕﾆｯﾄ用 / FOR TERMINAL UNIT
5	+ﾄﾗｽﾀｯﾋﾟﾝﾈｼﾞ 1ｼｭ SELF-TAPPING SCREW	20, φ5	5X20 SUS304	CODE NO. 000-162-608-10	4	
6	ﾌﾟﾘﾝﾀ取付板(1)組品 PRINTER FIXTURE	257	CP16-00501	CODE NO. 004-434-400-00	1	
7	ﾌﾟﾘﾝﾀ取付板(2)組品 PRINTER FIXTURE	257	CP16-00502	CODE NO. 004-434-410-00	1	

型式/ｺｰﾄﾞ番号が２段の場合、下段より上段に代わる過渡期品であり、どちらかが入っています。　なお、品質は変わりません。

TWO TYPES AND CODES MAY BE LISTED FOR AN ITEM. THE LOWER PRODUCT MAY BE SHIPPED IN PLACE OF THE UPPER PRODUCT. QUALITY IS THE SAME.

（略図の寸法は、参考値です。　DIMENSIONS IN DRAWING FOR REFERENCE ONLY.）

FURUNO ELECTRIC CO., LTD.

C5609-M07-G

Downloaded from www.Manualslib.com manuals search engine

FURUNO

CODE NO.	004-438-930-00	16AK-X-9407 -3
TYPE	CP16-02501	1/1

工事材料表

INSTALLATION MATERIALS

番号 NO.	名称 NAME	略図 OUTLINE	型名／規格 DESCRIPTIONS	数量 Q'TY	用途／備考 REMARKS
1	ｹｰﾌﾞﾙ押え(1-3) CABLE CLAMP	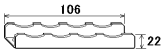	16-018-6008-1 ROHS 16-018-6008-1 CODE NO. 100-301-101-10 100-301-101-00	1	
2	+ﾄﾗｽﾀｯﾋﾟﾝﾈｼﾞ 1ｼｭ SELF-TAPPING SCREW	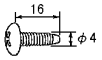	4X16 SUS304 CODE NO. 000-162-605-10	4	

型式/ｺｰﾄﾞ番号が２段の場合、下段より上段に代わる過渡期品であり、どちらかが入っています。 なお、品質は変わりません。

TWO TYPES AND CODES MAY BE LISTED FOR AN ITEM. THE LOWER PRODUCT MAY BE SHIPPED IN PLACE OF THE UPPER PRODUCT. QUALITY IS THE SAME.

（略図の寸法は、参考値です。 DIMENSIONS IN DRAWING FOR REFERENCE ONLY.）

FURUNO ELECTRIC CO ., LTD.

C5635-M06-D

PACKING LIST

24AA-X-9852 -10 1/1

PR-240/-CE-MSA

NAME	OUTLINE	DESCRIPTION/CODE No.	Q'TY
ユニット UNIT			
AC-DC電源 POWER SUPPLY UNIT	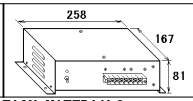	PR-240 000-013-636-00 **	1
工事材料 INSTALLATION MATERIALS			
工事材料 INSTALLATION MATERIALS		CP24-00151 005-931-190-00	1

ｺｰﾄﾞ番号末尾の[**]は、選択品の代表ｺｰﾄﾞを表します。

CODE NUMBER ENDING WITH "**" INDICATES THE CODE NUMBER OF REPRESENTATIVE MATERIAL.

型式/ｺｰﾄﾞ番号が2段の場合、下段より上段に代わる過渡期品であり、どちらかが入っています。 なお、品質は変わりません。

TWO TYPES AND CODES MAY BE LISTED FOR AN ITEM. THE LOWER PRODUCT MAY BE SHIPPED IN PLACE OF THE UPPER PRODUCT. QUALITY IS THE SAME.

（略図の寸法は、参考値です。 DIMENSIONS IN DRAWING FOR REFERENCE ONLY.）

C4417-Z02-J

Downloaded from www.Manualslib.com manuals search engine

FURUNO

CODE NO.	004-439-840-00	16AK-X-9412 -3
TYPE	OP16-26	1/1

改造ｷｯﾄ
MODIFICATION KIT.

番号 NO.	名称 NAME	略図 OUTLINE	型名／規格 DESCRIPTIONS		数量 Q'TY	用途／備考 REMARKS
1	中国ROHSﾏｰｸ CHINA ROHS SEAL	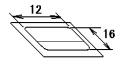	05-898-0362-1		1	
			CODE NO.	100-339-211-10		
2	ﾊﾘﾏｰｸ(ALC) LABEL	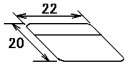	16-013-1052-0 ROHS		4	
			16-013-1052-0			
			CODE NO.	100-281-730-10		
				100-281-730-00		
3	型式銘板(ALC) NAME PLATE(ALC)	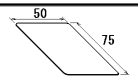	16-018-3821-2		1	
			CODE NO.	100-308-482-10		
4	FD-ROM FLOPPY DISK ROM	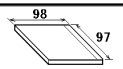	16-5-0179		1	
			CODE NO.	004-439-850-00		

型式/ｺｰﾄﾞ番号が２段の場合、下段より上段に代わる過渡期品であり、どちらかが入っています。　なお、品質は変わりません。

TWO TYPES AND CODES MAY BE LISTED FOR AN ITEM. THE LOWER PRODUCT MAY BE SHIPPED IN PLACE OF THE UPPER PRODUCT. QUALITY IS THE SAME.
（略図の寸法は、参考値です。　DIMENSIONS IN DRAWING FOR REFERENCE ONLY.）

FURUNO

CODE NO.	004-439-380-00	16AK-X-9414 -4
TYPE	CP16-02301	1/1

工事材料表
INSTALLATION MATERIALS

IC-215

番号 NO.	名称 NAME	略図 OUTLINE	型名／規格 DESCRIPTIONS		数量 Q'TY	用途／備考 REMARKS
1	ﾋｭｰｽﾞﾊﾘﾏｰｸ FUSE LABEL	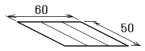	03-153-1312-0 ROHS		1	
			CODE NO.	100-292-140-10		
2	ｱｰｽ板 COPPER STRAP	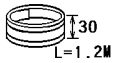	05-003-0031-0 ROHS		1	
			05-003-0031-0			
			CODE NO.	590-300-310-10		
				590-300-310-00		
3	+ﾄﾗｽﾀｯﾋﾟﾝﾈｼﾞ 1ｼｭ SELF-TAPPING SCREW	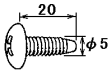	5X20 SUS304		4	
			CODE NO.	000-162-608-10		
4	ﾋｭｰｽﾞ FUSE GLASS TUBE TYPE	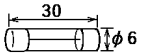	FGBO 125V 7A PBF		1	
			CODE NO.	000-155-831-10		
5	ｹｰﾌﾞﾙ組品MJ CABLE ASSY.	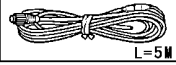	MJ-A3SPF0018-050ZC		1	
			CODE NO.	000-154-025-10		

型式/ｺｰﾄﾞ番号が２段の場合、下段より上段に代わる過渡期品であり、どちらかが入っています。　なお、品質は変わりません。

TWO TYPES AND CODES MAY BE LISTED FOR AN ITEM. THE LOWER PRODUCT MAY BE SHIPPED IN PLACE OF THE UPPER PRODUCT. QUALITY IS THE SAME.
（略図の寸法は、参考値です。　DIMENSIONS IN DRAWING FOR REFERENCE ONLY.）

Downloaded from www.Manualslib.com manuals search engine

FURUNO

CODE NO.	004-439-390-00	16AK-X-9415 -6
TYPE	CP16-02302	1/1

工事材料表

INSTALLATION MATERIALS

番号 NO.	名称 NAME	略図 OUTLINE	型名／規格 DESCRIPTIONS	数量 Q'TY	用途／備考 REMARKS
1	ﾌｧｽﾅｰ(3) HOOK LOOP FASTENER	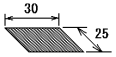	16-007-6814-0 ROHS CODE NO. 100-237-670-10	4	
2	ﾌｧｽﾅｰ(4) HOOK LOOP FASTENER	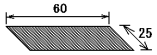	16-007-6815-0 ROHS CODE NO. 100-237-680-10	4	
3	ﾊﾘﾏｰｸ LABEL	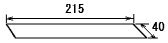	16-011-5813-0 CODE NO. 100-354-210-10	1	

型式/ｺｰﾄﾞ番号が２段の場合、下段より上段に代わる過渡期品であり、どちらかが入っています。　なお、品質は変わりません。

TWO TYPES AND CODES MAY BE LISTED FOR AN ITEM. THE LOWER PRODUCT MAY BE SHIPPED IN PLACE OF THE UPPER PRODUCT. QUALITY IS THE SAME.

（略図の寸法は、参考値です。　DIMENSIONS IN DRAWING FOR REFERENCE ONLY.）

FURUNO ELECTRIC CO., LTD.

C5632-M28-F

FURUNO

CODE NO.	004-439-370-00	16AK-X-9301 -2 1/1
TYPE	SP16-01301	BOX NO. P

SHIP NO.	SPARE PARTS LIST FOR	U S E	SETS PER VESSEL

ITEM NO.	NAME OF PART	OUTLINE	DWG. NO. OR TYPE NO.	QUANTITY WORKING PER SET	QUANTITY WORKING PER VES	QUANTITY SPARE	REMARKS/CODE NO.
1	ﾋｭｰｽﾞ FUSE	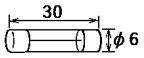	FGBO 125V 15A PBF			1	000-155-827-10
2	ﾋｭｰｽﾞ FUSE	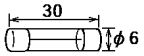	FGBO 125V 7A PBF			1	000-155-831-10

MFR'S NAME	FURUNO ELECTRIC CO.,LTD.	DWG NO.	C5635-P01-C	1/1

（略図の寸法は、参考値です。　DIMENSIONS IN DRAWING FOR REFERENCE ONLY.）

型式/ｺｰﾄﾞ番号が２段の場合、下段より上段に代わる過渡期品であり、どちらかが入っています。　なお、品質は変わりません。

TWO TYPES AND CODES MAY BE LISTED FOR AN ITEM. THE LOWER PRODUCT MAY BE SHIPPED IN PLACE OF THE UPPER PRODUCT. QUALITY IS THE SAME.

FURUNO

表 1 TABLE 1

寸法区分（mm） DIMENSION	公差（mm） TOLERANCE
L≦50	±1.5
50<L≦100	±2.5
100<L≦500	±3

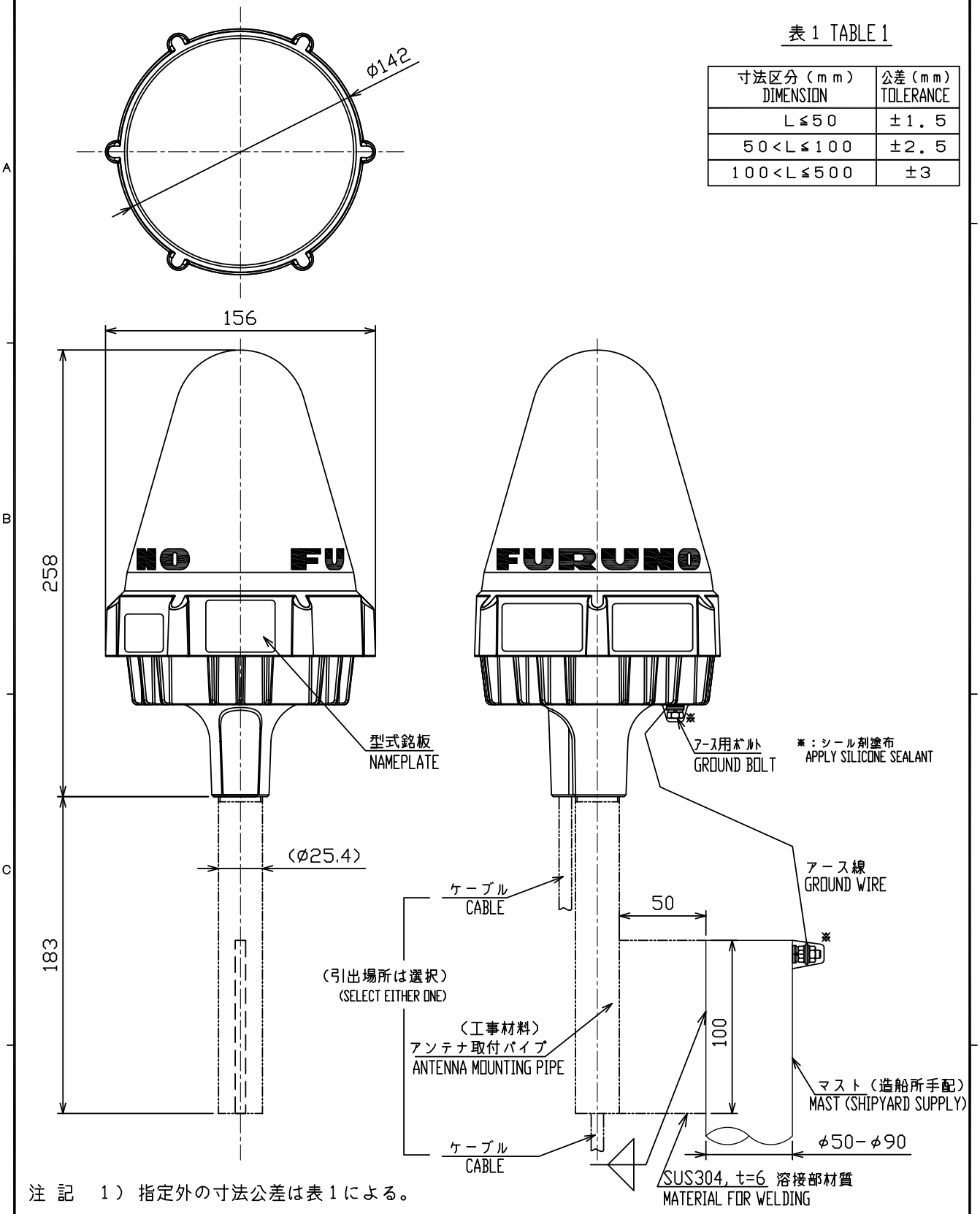

注 記 1）指定外の寸法公差は表 1 による。

NOTE 1. TABLE 1 INDICATES TOLERANCE OF DIMENSIONS WHICH IS NOT SPECIFIED.

DRAWN 12/JAN/2012 T.YAMASAKI		TITLE	IC-115/116
CHECKED 12/JAN/2012 H.MAKI		名称	アンテナユニット
APPROVED	FELCOM 15/16		外寸図
SCALE 1/3	MASS 1.4 ±10% kg 質量はパイプ工材を含まず。 MASS W/O MOUNTING PIPE.	NAME	ANTENNA UNIT
DWG No. C5635-G01- E	16-018-100G-2		OUTLINE DRAWING

FURUNO ELECTRIC CO., LTD.

Downloaded from www.Manualslib.com manuals search engine

Downloaded from www.Manualslib.com manuals search engine

FURUNO

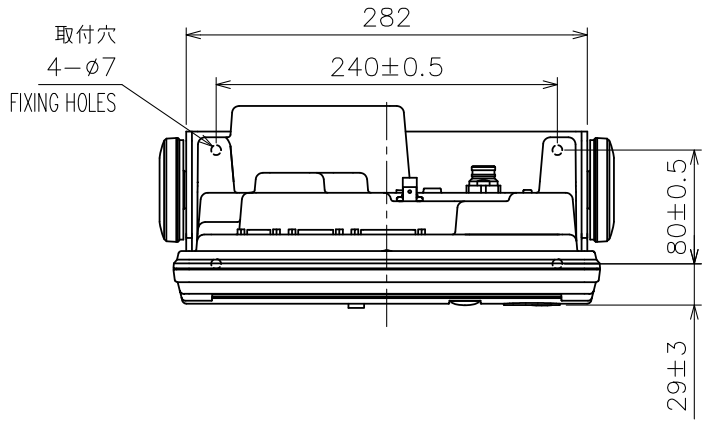

表１ TABLE 1

寸法区分（ｍｍ） DIMENSION	公差（ｍｍ） TOLERANCE
Ｌ≦５０	±１．５
５０<Ｌ≦１００	±２．５
１００<Ｌ≦５００	±３

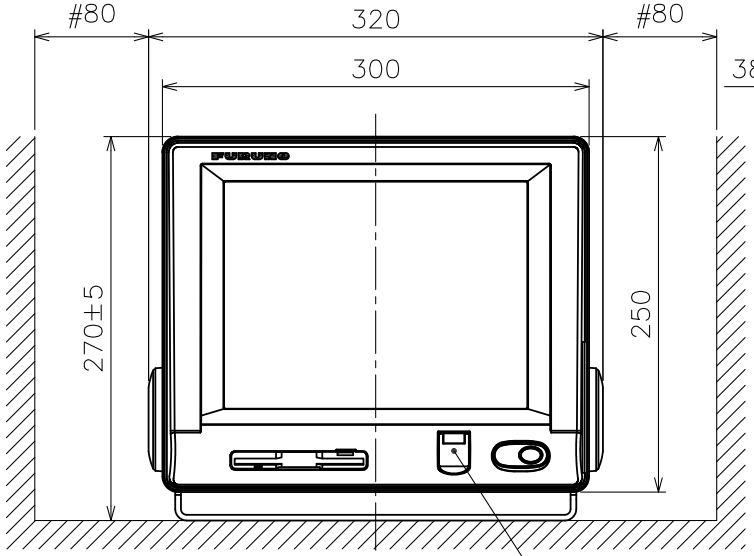

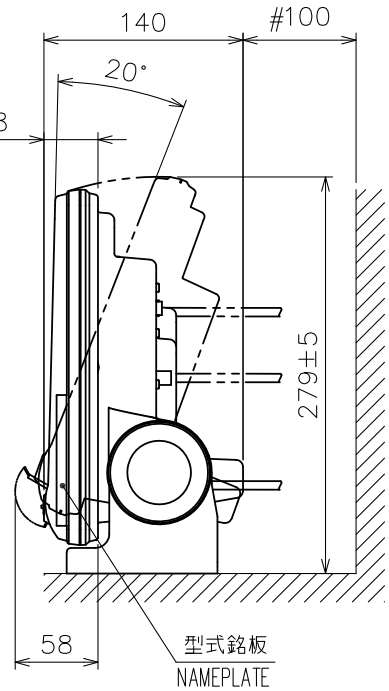

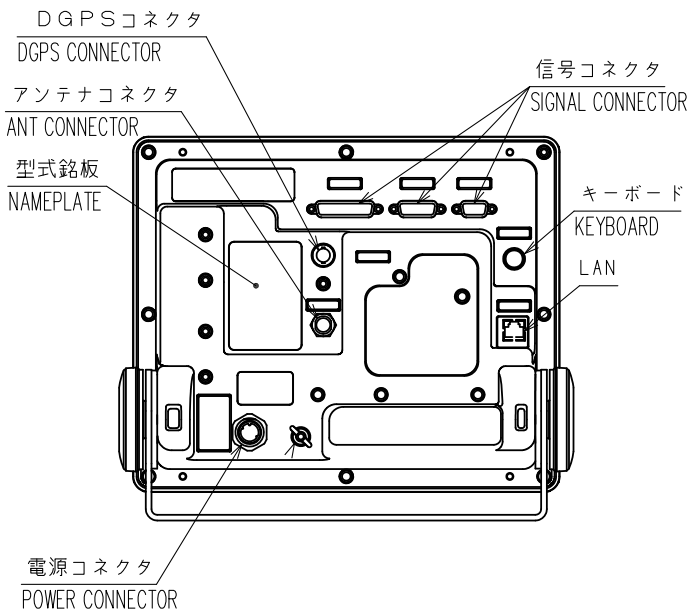

注　記　１）指定外の寸法公差は表１による。
　　２）＃印寸法は最小サービス空間寸法とする。
　　３）取付用ネジはトラスタッピンネジ呼び径５×２０を使用のこと。

NOTE　1. TABLE 1 INDICATES TOLERANCE OF DIMENSIONS WHICH IS NOT SPECIFIED.
　　2. #: MINIMUM SERVICE CLEARANCE.
　　3. USE TAPPING SCREWS ø5x20 FOR FIXING THE UNIT.

DRAWN 8/Jun/09 T.YAMASAKI		TITLE	IC-215
CHECKED 8/Jun/09 T.TAKENO		名称	ターミナルユニット（卓上装備）
APPROVED 18/Jun/09 R.Esumi	FELCOM 15		外寸図
SCALE 1/5 MASS 4.9 ±10% kg		NAME	TERMINAL UNIT (TABLETOP MOUNT)
DWG. No. C5635-G02- F	REF. No. 16-018-300G-7		OUTLINE DRAWING

FURUNO ELECTRIC CO., LTD.

Downloaded from www.Manualslib.com manuals search engine

FURUNO

表１ TABLE 1

寸法区分（ｍｍ） DIMENSION	公差（ｍｍ） TOLERANCE
Ｌ≦５０	±１．５
５０<Ｌ≦１００	±２．５
１００<Ｌ≦５００	±３

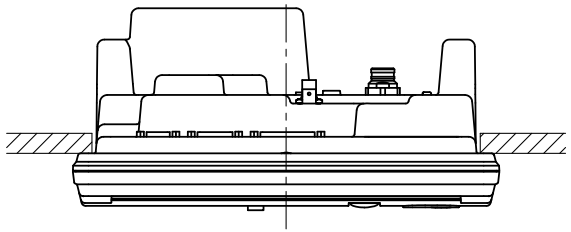

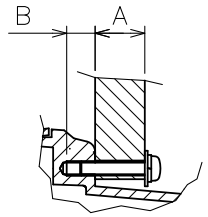

取付ネジ部断面　尺度 1/2
DETAIL FOR FASTENING (SCALE: 1/2)

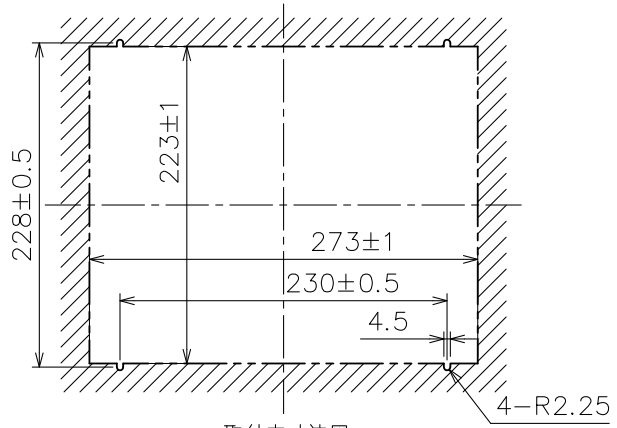

取付穴寸法図
CUTOUT DIMENSIONS

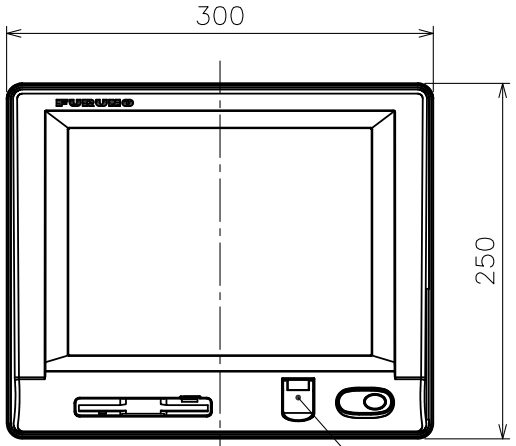

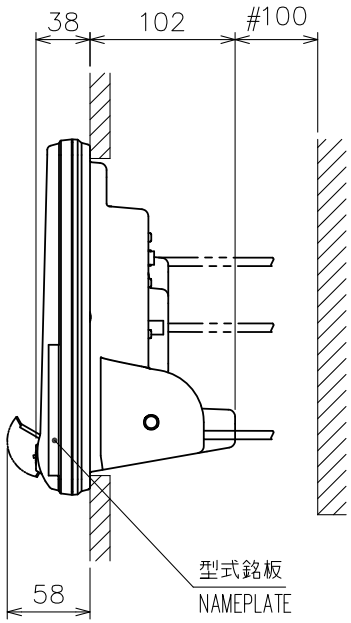

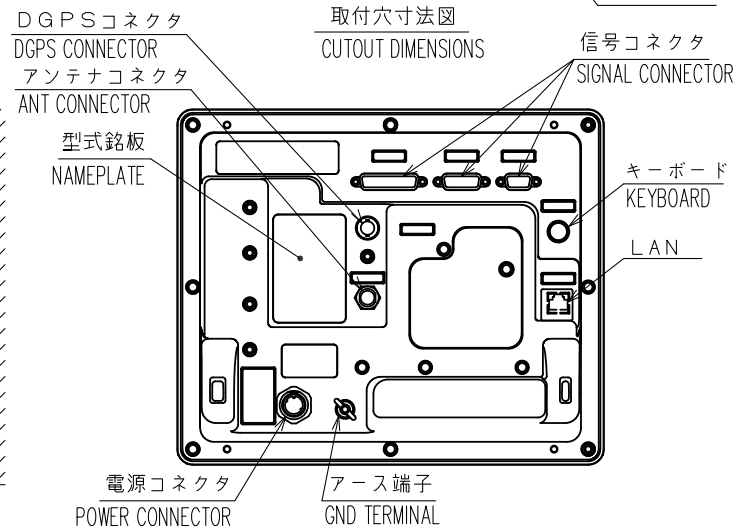

注　記　１）　指定外の寸法公差は表１による。
　　２）　＃印寸法は最小サービス空間寸法とする。
　　３）　取付には、セムスネジＢ　Ｍ４×２０を使用のこと。
　　壁の厚さ（Ａ）は１１≦Ａ≦１４とする。それ以外の壁に
　　装備する場合、使用するネジ長さは（Ａ＋７．８）±２とする。
　　筐体にはネジ部（Ｂ）を８ｍｍ以上入れないこと。（Ｂ≦８）

NOTE
1. TABLE 1 INDICATES TOLERANCE OF DIMENSIONS WHICH IS NOT SPECIFIED.
2. #: MINIMUM SERVICE CLEARANCE.
3. USE SEMS SCREWS M4x20 FOR FIXING THE UNIT.
THICKNESS A: 11≦A≦14 OR SCREW LENGTH: (A+7.8)±2.
DO NOT FASTEN SCREWS INTO UNIT MORE THAN 8 mm (B≦8).

DRAWN 8/Jun/09 T.YAMASAKI			TITLE IC-215
CHECKED 8/Jun/09 T.TAKENO			名称 ターミナルユニット（埋込装備）
APPROVED 18/Jun/09 R.Esumi	FELCOM 15		外寸図
SCALE 1/5	MASS 4.3 ±10% kg		NAME TERMINAL UNIT (FLUSH MOUNT)
DWG. No. C5635-G03- F	REF. No. 16-018-310G-7		OUTLINE DRAWING

FURUNO ELECTRIC CO., LTD.

Downloaded from www.Manualslib.com manuals search engine

FURUNO

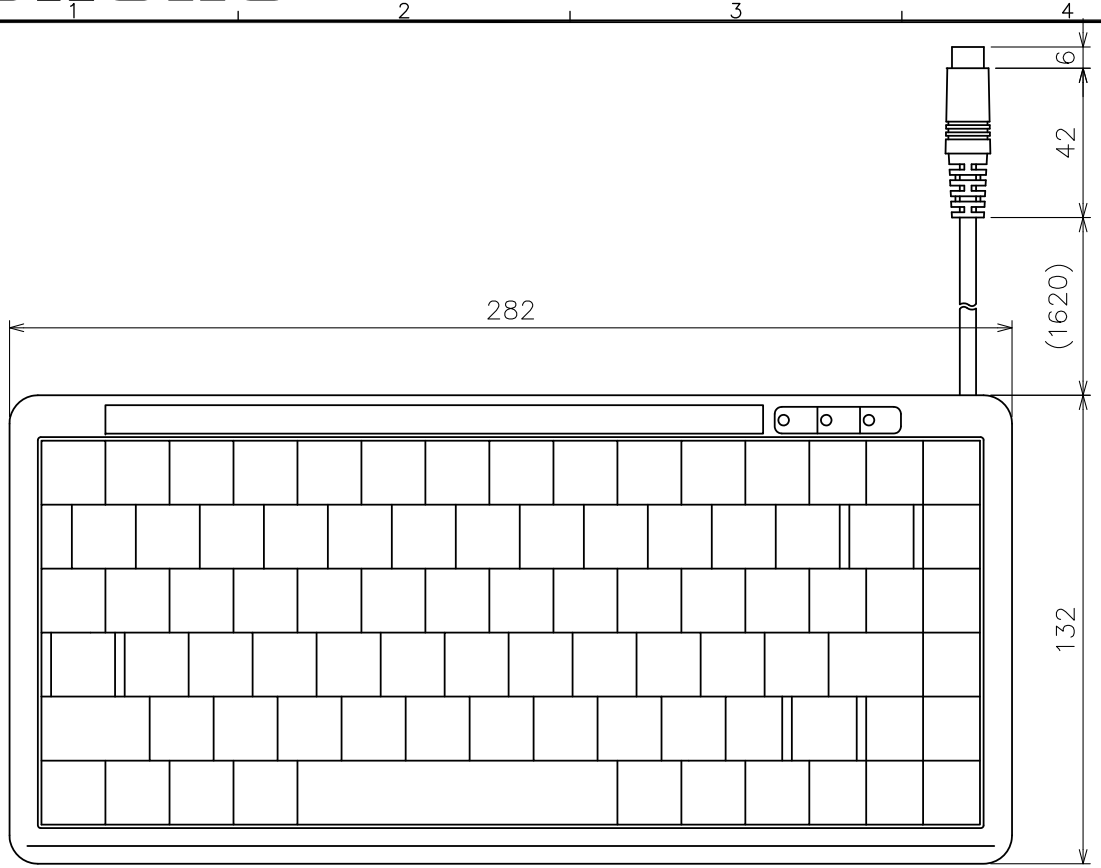

矢視 A
VIEW A

表1 TABLE 1

寸法区分（mm） DIMENSION	公差（mm） TOLERANCE
L≦50	±1.5
50<L≦100	±2.5
100<L≦500	±3

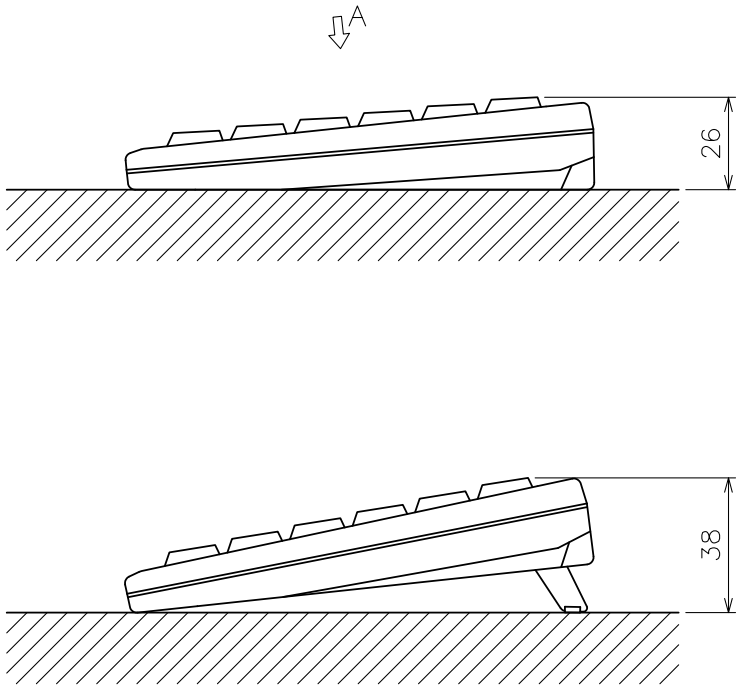

注 記　1）指定外の寸法公差は表1による。

NOTE　1. TABLE1 INDICATES TOLERANCE OF DIMENSIONS WHICH IS NOT SPECIFIED.

DRAWN 25/Jun/09 T.YAMASAKI		TITLE	G84-4100PPAUS
CHECKED 25/Jun/09 T.TAKENO		名称	キーボード
APPROVED 8/Jul/09 R.Esumi			外寸図
SCALE 1/2 MASS 0.4 kg ±10%		NAME	KEYBOARD
DWG.No. C5635-G21- A	REF.No. 16-018-910G-0		OUTLINE DRAWING

FURUNO ELECTRIC CO., LTD.

Downloaded from www.Manualslib.com manuals search engine

FURUNO

表 1 TABLE 1

寸法区分（mm） DIMENSIONS	公差（mm） TOLERANCE
L≦50	±1.5
50<L≦100	±2.5
100<L≦500	±3

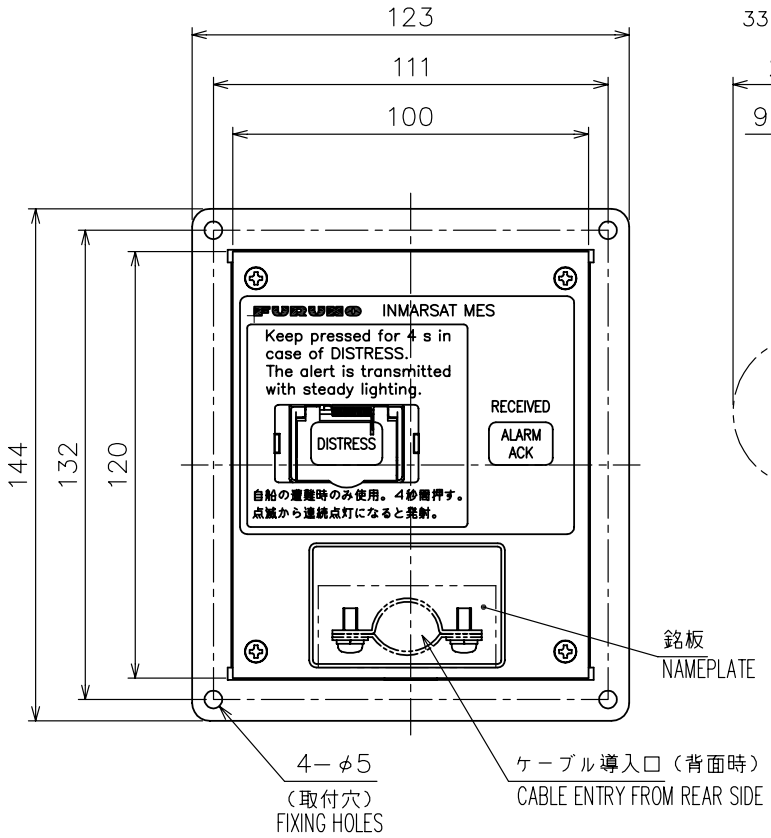

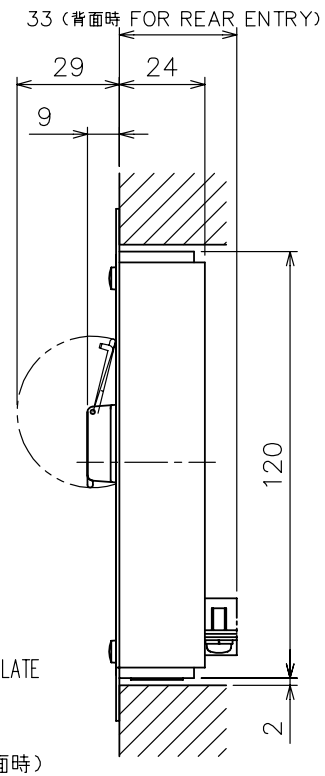

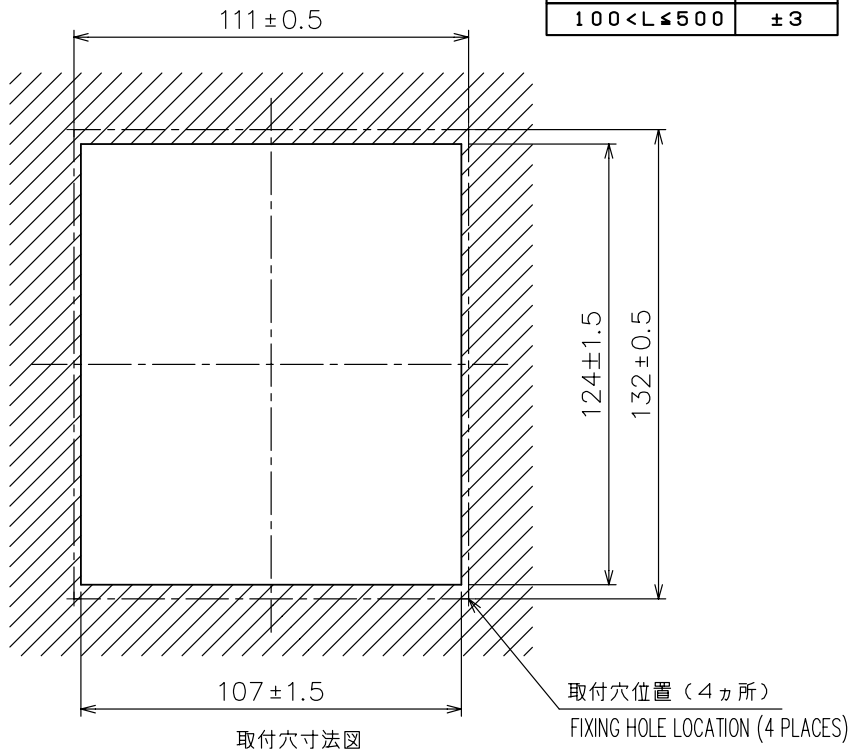

取付穴寸法図

CUTOUT DIMENSIONS

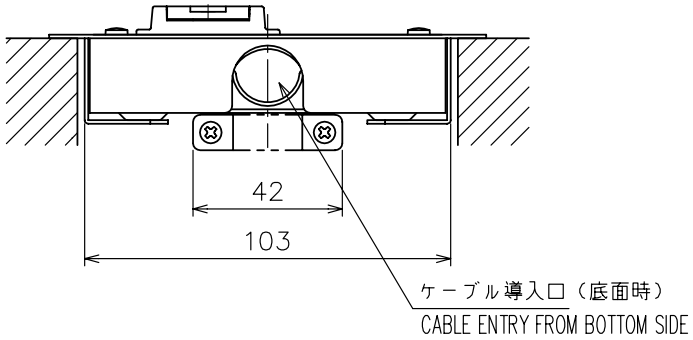

注　記　1）指定外の寸法公差は表１による。
　　2）取付用ネジは＋トラスタッピンネジ呼び径４×１６を使用のこと。

NOTE　1. TABLE 1 INDICATES TOLERANCE OF DIMENSIONS WHICH IS NOT SPECIFIED.
　　2. USE SELF-TAPPING SCREWS 4X16 FOR FIXING THE UNIT.

DRAWN Apr. 21 '04 E.MIYOSHI		TITLE	IC-305
CHECKED TAKAHASHI. T		名称	遭難警報器（埋込装備）
APPROVED	FELCOM 15		外寸図
SCALE 1/2 MASS 0.45 ±10% kg		NAME	DISTRESS ALERT/RECEIVED CALL UNIT
DWG.No. C5635-G12- B	16-018-410G-2		OUTLINE DRAWING

FURUNO ELECTRIC CO., LTD.

FURUNO

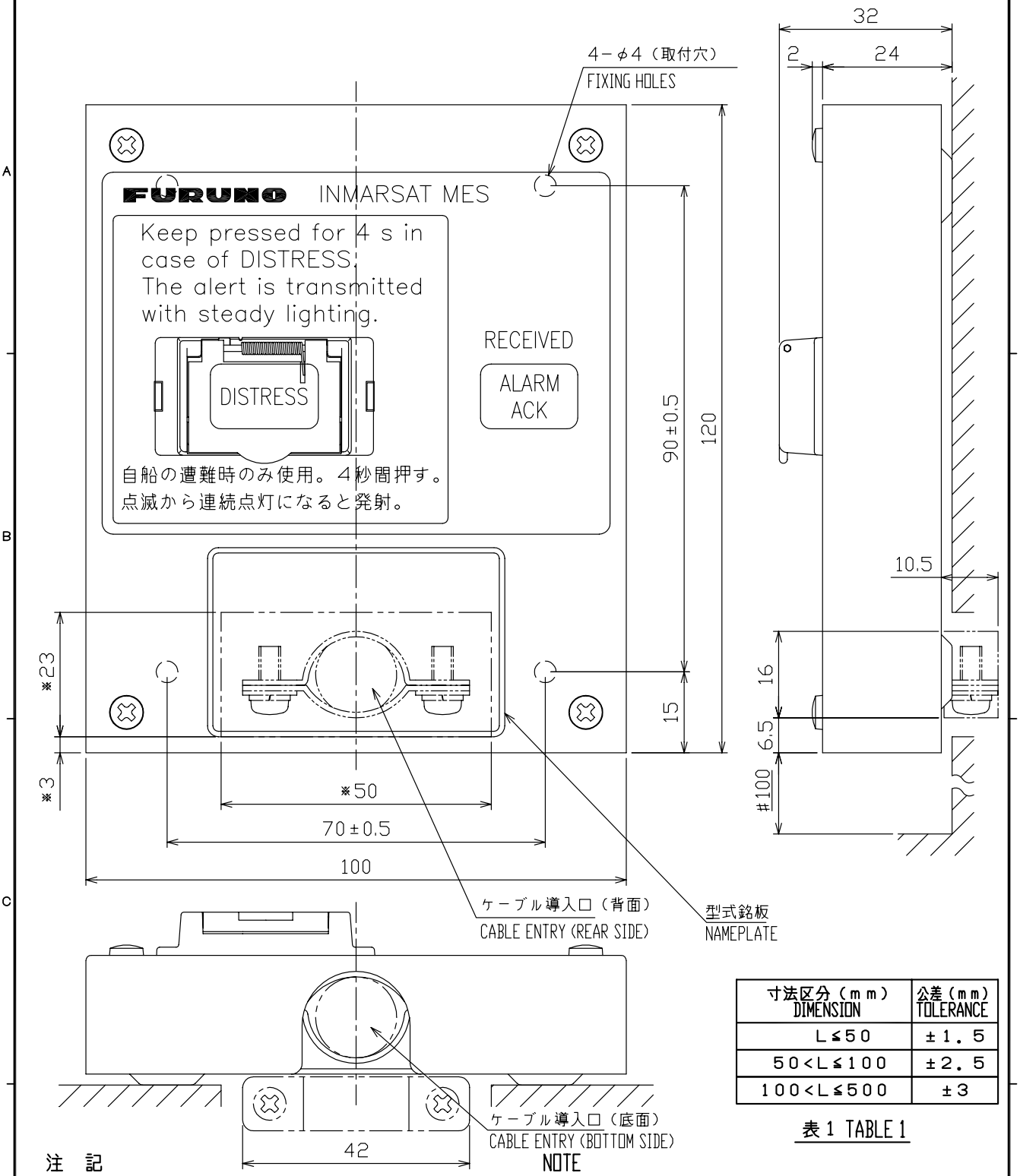

寸法区分（mm）DIMENSION	公差（mm）TOLERANCE
L≦50	±1.5
50<L≦100	±2.5
100<L≦500	±3

表１ TABLE 1

注　記

１）＃印寸法は最小サービス空間寸法とする。
２）指定外の寸法公差は表１による。
３）取付には＋タッピンネジ３×１０を使用のこと。
４）※印寸法は、背面からのケーブル導入穴寸法。

NOTE

1. #: RECOMMENDED SERVICE CLEARANCE.
2. TABLE 1 INDICATES TOLERANCE OF DIMENSIONS.
3. USE TAPPING SCREWS 3x10 FOR FIXING THE UNIT.
4. ※: CUTOUT DIMENSIONS FOR REAR SIDE CABLE ENTRY.

DRAWN July 11 '03 T.YAMASAKI			TITLE IC-305
CHECKED July 14 '03 T.Matsuguchi			名称 遭難警報器
APPROVED	FELCOM 15/16		外寸図
SCALE 1/1	MASS 0.34 ±10% kg		NAME DISTRESS ALERT/RECEIVED CALL UNIT
DWG No. C5635-G04- B	16-018-400G-1		OUTLINE DRAWING

FURUNO ELECTRIC CO., LTD.

Downloaded from www.Manualslib.com manuals search engine

Downloaded from www.Manualslib.com manuals search engine

FURUNO

表 1 TABLE 1

寸法区分（mm） DIMENSIONS	公差（mm） TOLERANCE
L≦50	±1.5
50<L≦100	±2.5
100<L≦500	±3

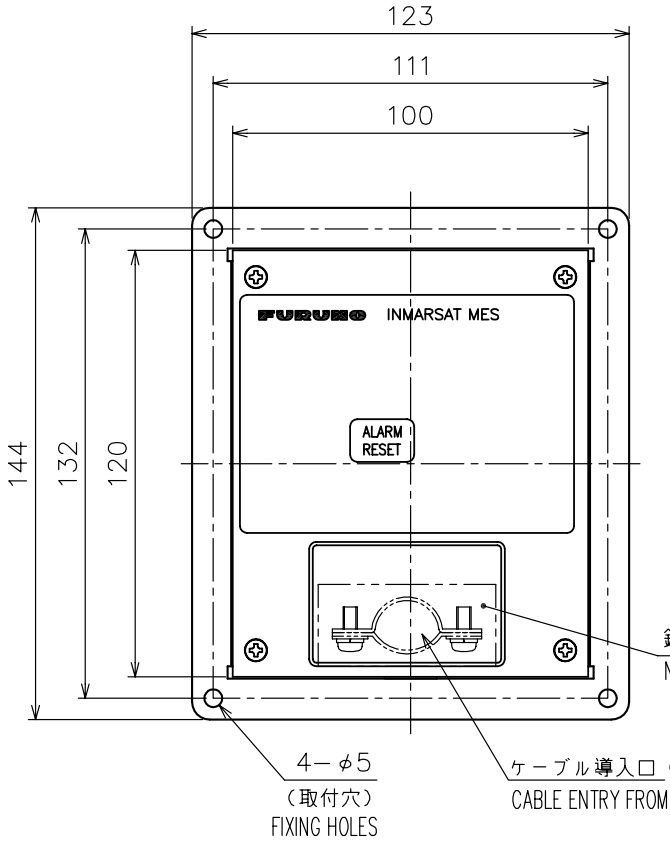

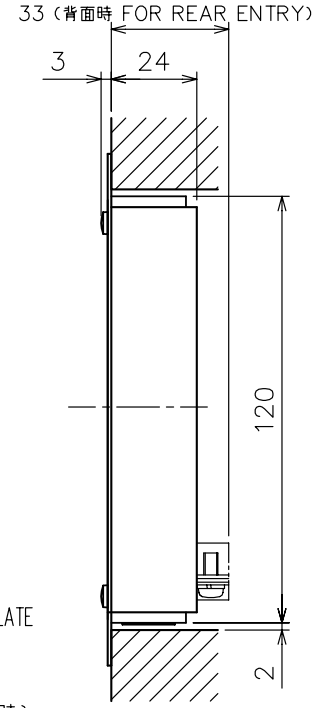

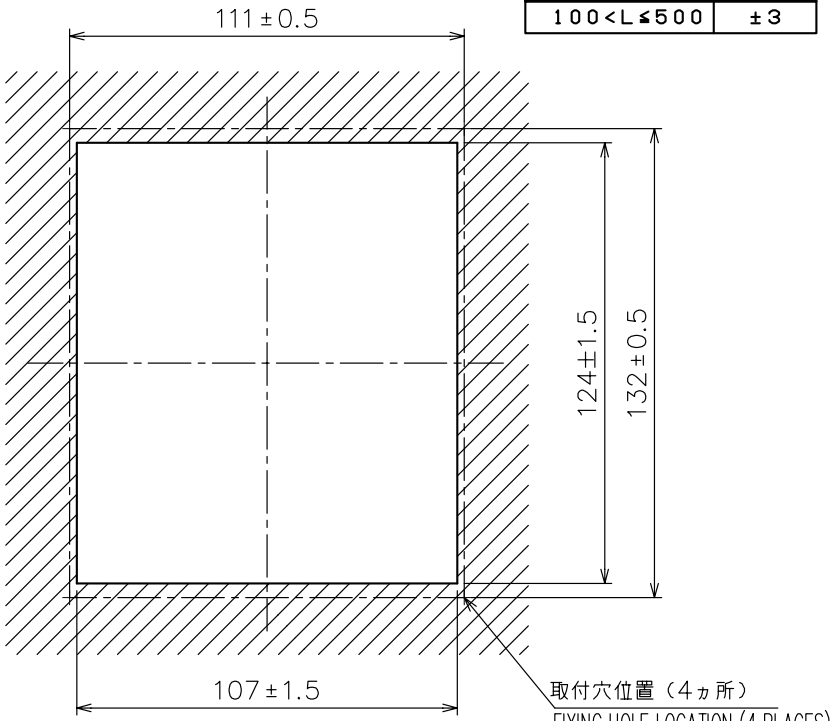

取付穴寸法図
CUTOUT DIMENSIONS

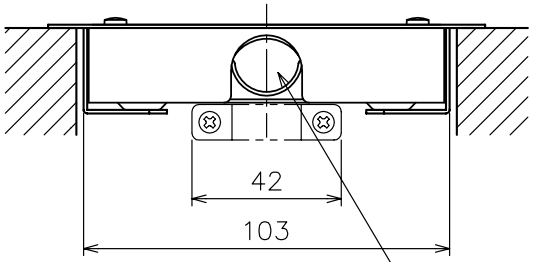

注　記　1）指定外の寸法公差は表１による。
　　2）取付用ネジは＋トラスタッピンネジ呼び径４×１６を使用のこと。

NOTE　1. TABLE 1 INDICATES TOLERANCE OF DIMENSIONS WHICH IS NOT SPECIFIED.
　　2. USE SELF-TAPPING SCREWS 4X16 FOR FIXING THE UNIT.

DRAWN Apr. 21 '04 E.MIYOSHI		TITLE	IC-306
CHECKED TAKAHASHI. T		名称	アラームユニット（埋込装備）
APPROVED	FELCOM 15		外寸図
SCALE 1/2 MASS 0.44 ±10% kg		NAME	ALARM UNIT (FLUSH MOUNT)
DWG.No. C5635-G09- B	16-018-510G-1		OUTLINE DRAWING

FURUNO ELECTRIC CO., LTD.

FURUNO

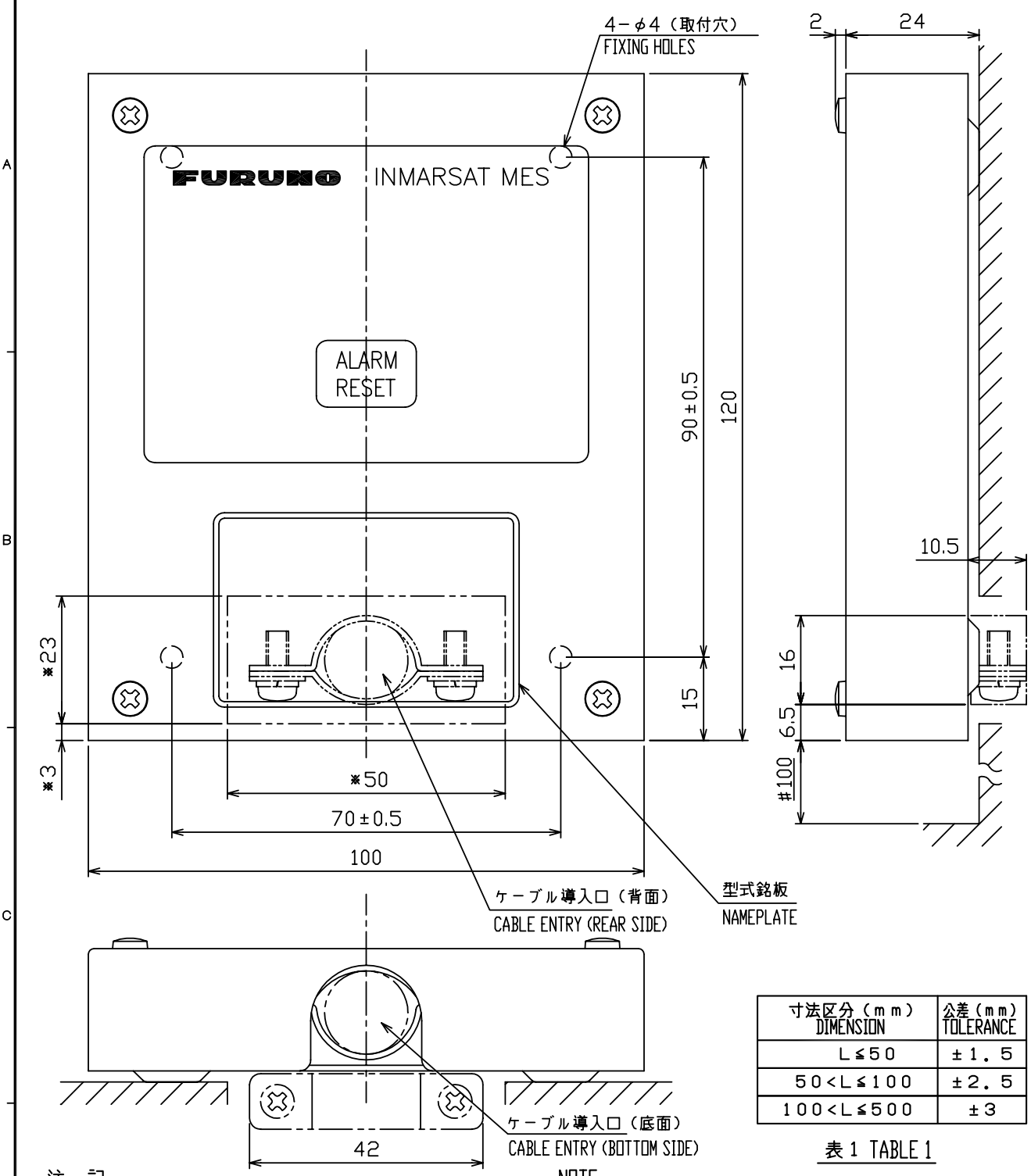

寸法区分（mm）DIMENSION	公差（mm）TOLERANCE
L≦50	±1.5
50<L≦100	±2.5
100<L≦500	±3

表1 TABLE 1

注　記

1）#印寸法は最小サービス空間寸法とする。
2）指定外の寸法公差は表1による。
3）取付には＋タッピンネジ3×10を使用のこと。
4）※印寸法は、背面からのケーブル導入穴寸法。

NOTE

1. #: RECOMMENDED SERVICE CLEARANCE.
2. TABLE 1 INDICATES TOLERANCE OF DIMENSIONS.
3. USE TAPPING SCREWS 3x10 FOR FIXING THE UNIT.
4. ※: CUTOUT DIMENSIONS FOR REAR SIDE CABLE ENTRY.

DRAWN Dec. 19 '02 T.YAMASAKI			TITLE IC-306
CHECKED Dec. 19 '02 Y.KIMURA			名称 アラームユニット
APPROVED	FELCOM 15/16		外寸図
SCALE 1/1	MASS 0.33 ±10% kg		NAME ALARM UNIT
DWG No. C5635-G05- B	16-018-500G-1		OUTLINE DRAWING

FURUNO ELECTRIC CO., LTD.

Downloaded from www.Manualslib.com manuals search engine

FURUNO

表 1 TABLE 1

寸法区分（mm） DIMENSIONS	公差（mm） TOLERANCE
L≦50	±1.5
50<L≦100	±2.5
100<L≦500	±3

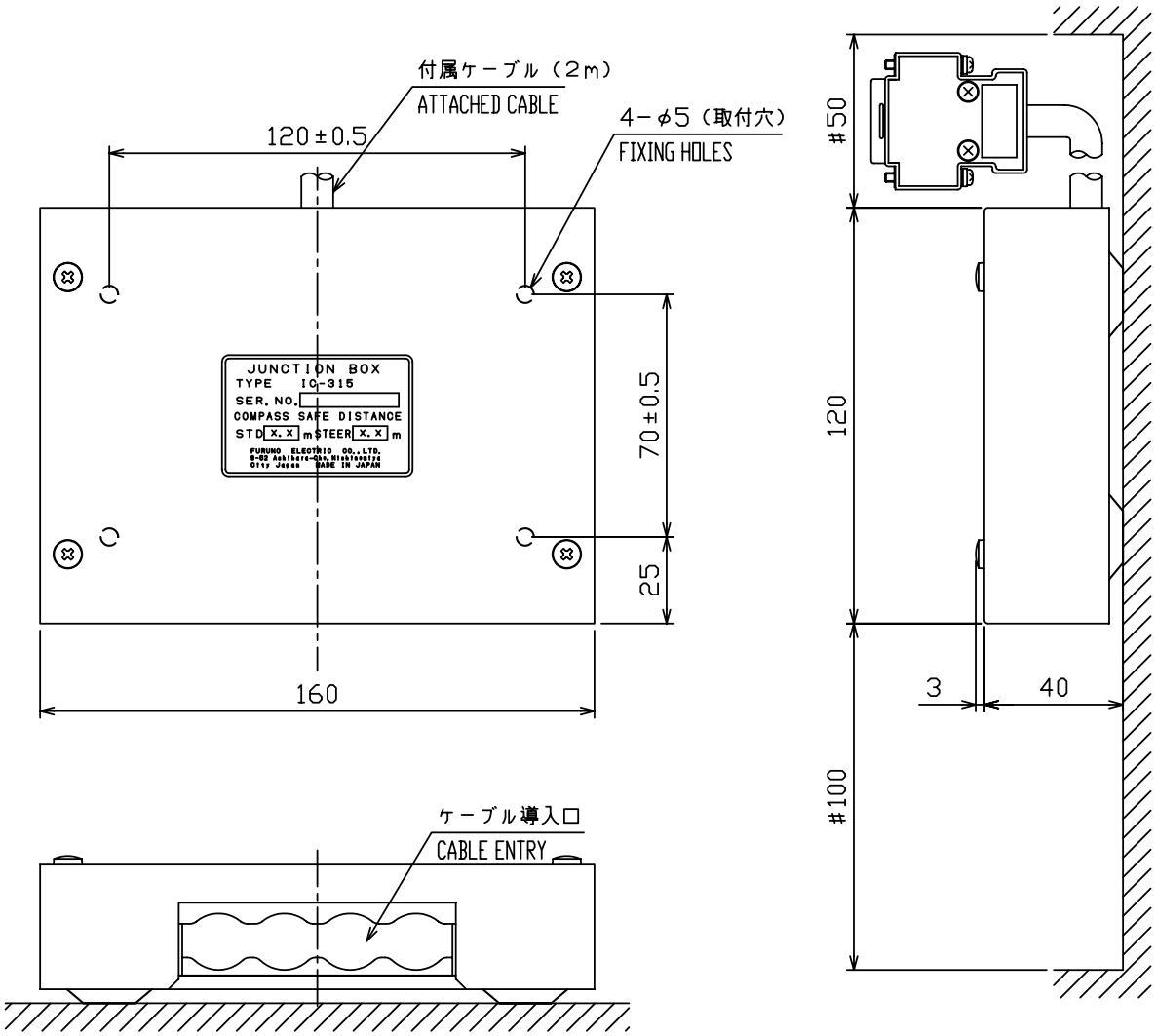

注　記　1）＃印寸法は最小サービス空間寸法とする。
　　2）指定外の寸法公差は表1による。
　　3）取付用ネジは＋タッピンネジ呼び径4×16を使用のこと。

NOTE　1. #: MINIMUM SERVICE CLEARANCE.
　　2. TABLE 1 INDICATES TOLERANCE OF DIMENSIONS WHICH IS NOT SPECIFIED.
　　3. USE SELF-TAPPING SCREWS 4x16 FOR FIXING THE UNIT.

DRAWN Mar. 1 '05 T.YAMASAKI			TITLE IC-315
CHECKED Mar. 1 '05 T.MATSUGUCHI			名称 接続箱
APPROVED	FELCOM 15/16		外寸図
SCALE 1/2	MASS 0.96 ±10% kg	質量はケーブルを含む。 MASS W/ CABLE.	NAME JUNCTION BOX
DWG No. C5635-G06- D		16-018-600G-2	OUTLINE DRAWING

FURUNO ELECTRIC CO., LTD.

Downloaded from www.Manualslib.com manuals search engine

Downloaded from www.Manualslib.com manuals search engine

FURUNO

表1 TABLE 1

寸法区分（mm） DIMENSION	公差（mm） TOLERANCE
L≦50	±1.5
50<L≦100	±2.5
100<L≦500	±3

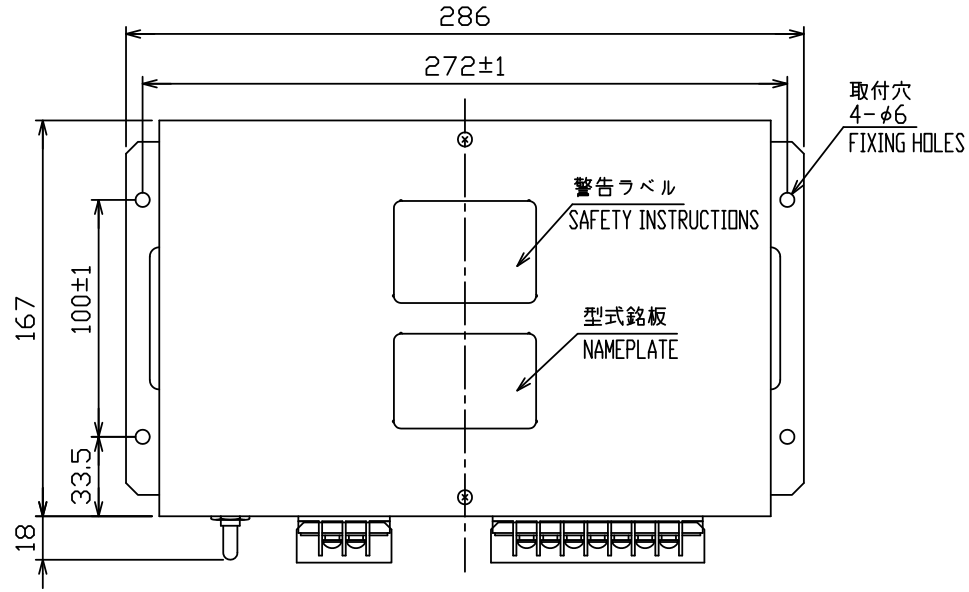

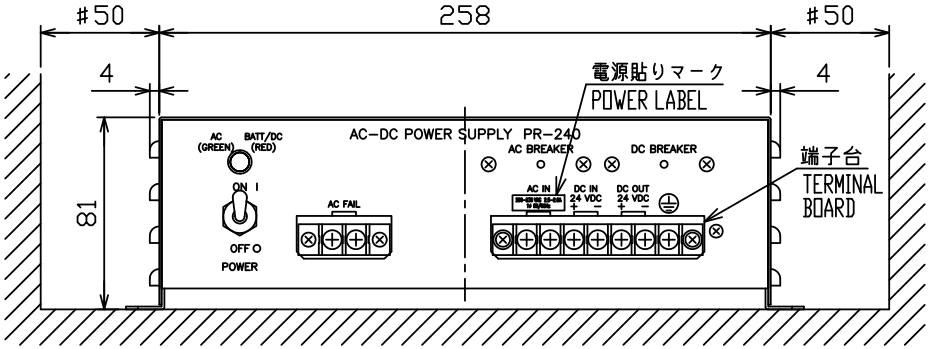

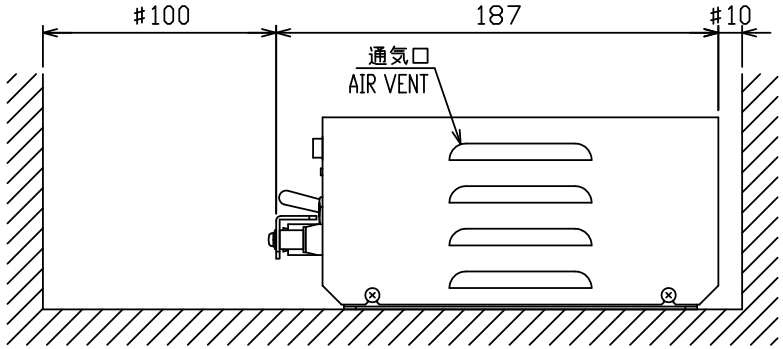

注　記　1）指定なき寸法公差は表1による。
　　2）#印寸法は最小サービス空間寸法とする。
　　3）取付用ネジは＋トラスタッピンネジ 呼び径4×16を使用のこと。

NOTE　1. TABLE 1 INDICATES TOLERANCE OF DIMENSIONS WHICH IS NOT SPECIFIED.
　　2. #: MINIMUM SERVICE CLEARANCE.
　　3. USE TAPPING SCREWS φ4x16 FOR FIXING THE UNIT.

DRAWN 25/Sep/09 T.YAMASAKI		TITLE	PR-240
CHECKED 25/Sep/09 T.TAKENO		名称	AC/DC電源ユニット
APPROVED 26/Oct/09 R.Esumi			外寸図
SCALE 1/3	MASS 3.2 ±10% kg	NAME	AC/DC POWER SUPPLY UNIT
DWG No. C5003-G03-J	REF. No. 24-003-500G-4		OUTLINE DRAWING

FURUNO ELECTRIC CO., LTD.

Downloaded from www.Manualslib.com manuals search engine

FURUNO

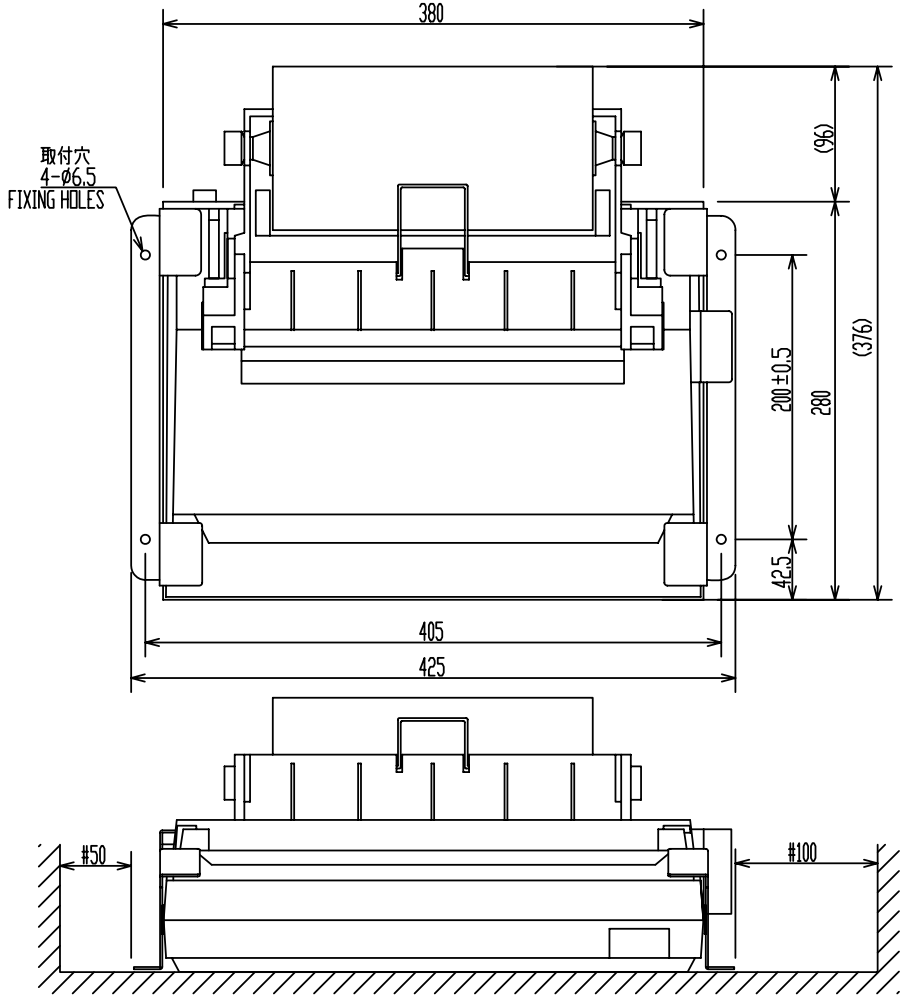

表 1 TABLE 1

寸法区分（mm） DIMENSIONS	公差（mm） TOLERANCE
0 < L ≦ 50	±1.5
50 < L ≦ 100	±2.5
100 < L ≦ 500	±3

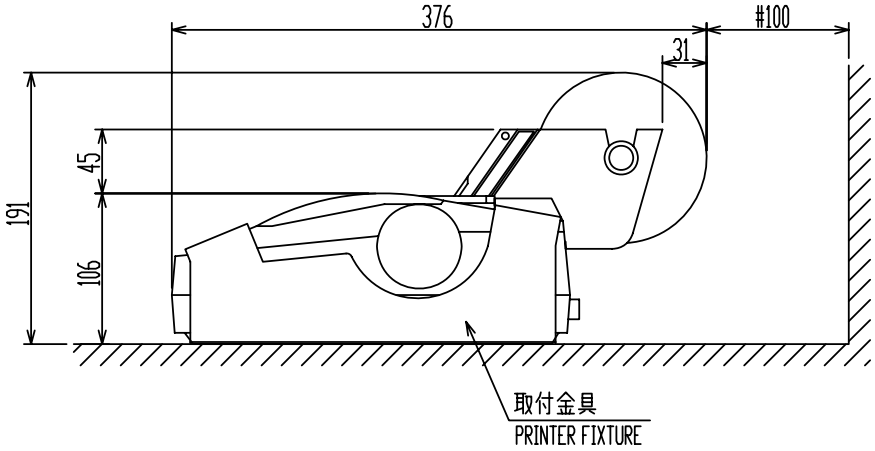

注 記 1）#印寸法は最小サービス空間寸法とする。
2）指定外の寸法公差は表1による。
3）取付用ネジはM6ボルトまたはコーチボルト呼び径6を使用のこと。

NOTE 1. #: MINIMUM SERVICE CLEARANCE.
2. TABLE 1 INDICATES TOLERANCE OF DIMENSIONS WHICH IS NOT SPECIFIED.
3. USE M6 BOLTS OR COACH SCREWS φ6 FOR FIXING THE UNIT.

DRAWN Nov.27,'06 E.MIYOSHI		TITLE	PP-510
CHECKED TAKAHASHI.T		名称	プリンタ
APPROVED Y.Hatai			外寸図
SCALE 1/5	MASS 3.8 ±10% kg	NAME	PRINTER
DWG.No. C5589-G08-K	REF.No. 16-007-660G-2		OUTLINE DRAWING

FURUNO ELECTRIC CO., LTD.

Downloaded from www.Manualslib.com manuals search engine

FURUNO

表 1 TABLE 1

寸法区分（mm） DIMENSION	公差（mm） TOLERANCE
L≦50	±1.5
50<L≦100	±2.5
100<L≦500	±3

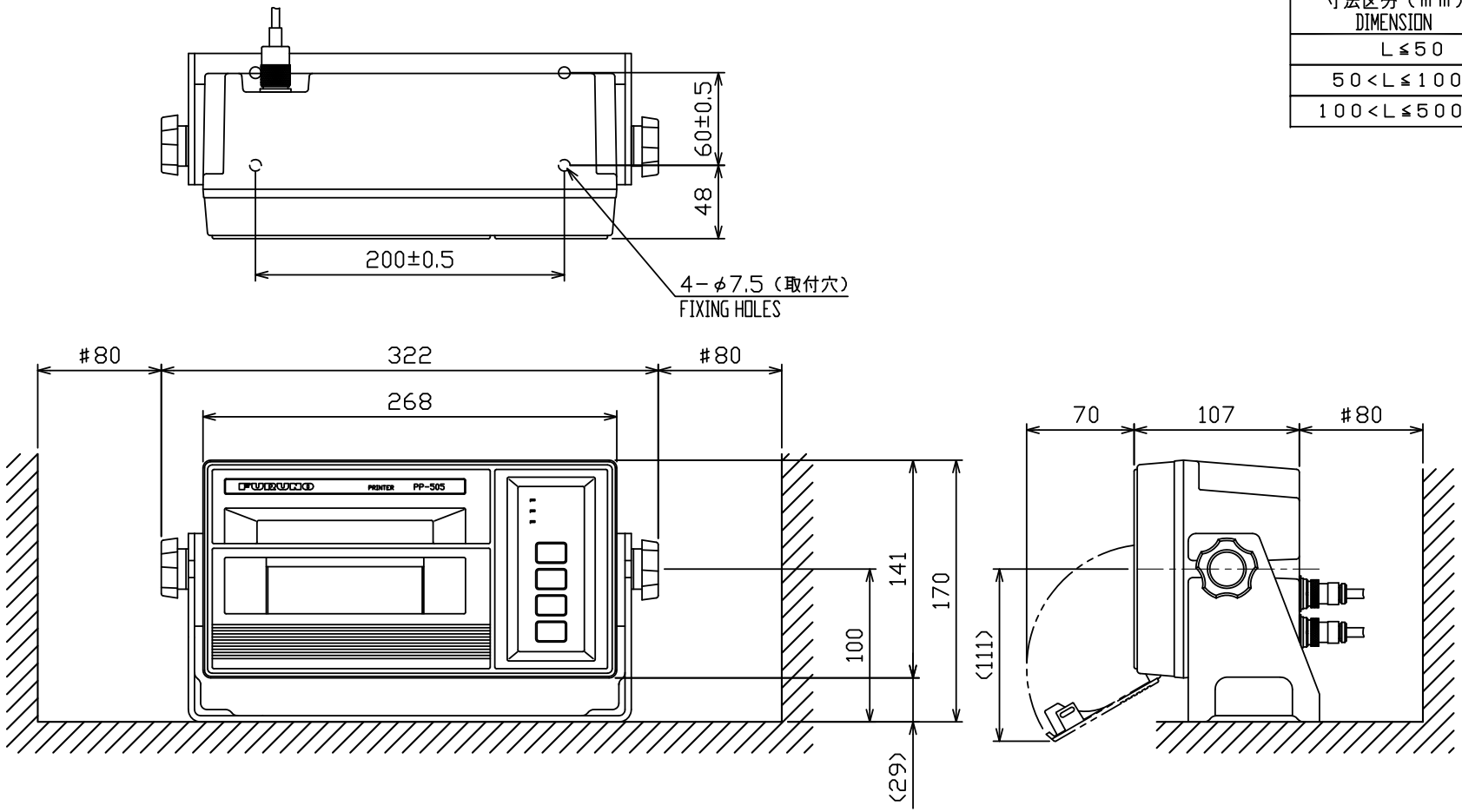

注　記

1）指定外の寸法公差は表 1 による。

2）#印寸法は最小サービス空間寸法とする。

NOTE

1. TABLE 1 INDICATES TOLERANCE OF DIMENSIONS WHICH IS NOT SPECIFIED.
2. #: MINIMUM SERVICE CLEARANCE.

DRAWN Oct. 12 '07 T.YAMASAKI		TITLE	PP-505/505FE/505FP
CHECKED Oct. 12 '07 T.TAKENO		名称	EGCプリンタ/プリンタ（卓上装備）
APPROVED Oct.15'07 R.Esumi			外寸図
SCALE 1/4 MASS 2.9 ±10% kg		NAME	EGC PRINTER/ PRINTER (TABLETOP MOUNT)
DWG.No. C5540-G03- D	16-010-005G-0		OUTLINE DRAWING

FURUNO ELECTRIC CO., LTD.

FURUNO

表 1 TABLE 1

寸法区分（mm）DIMENSION	公差（mm）TOLERANCE
L≦50	±1.5
50<L≦100	±2.5
100<L≦500	±3

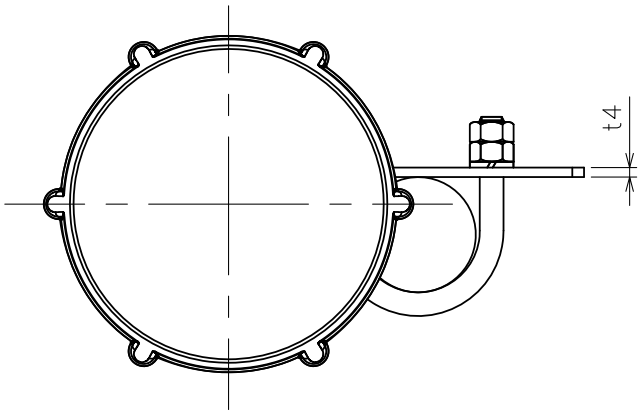

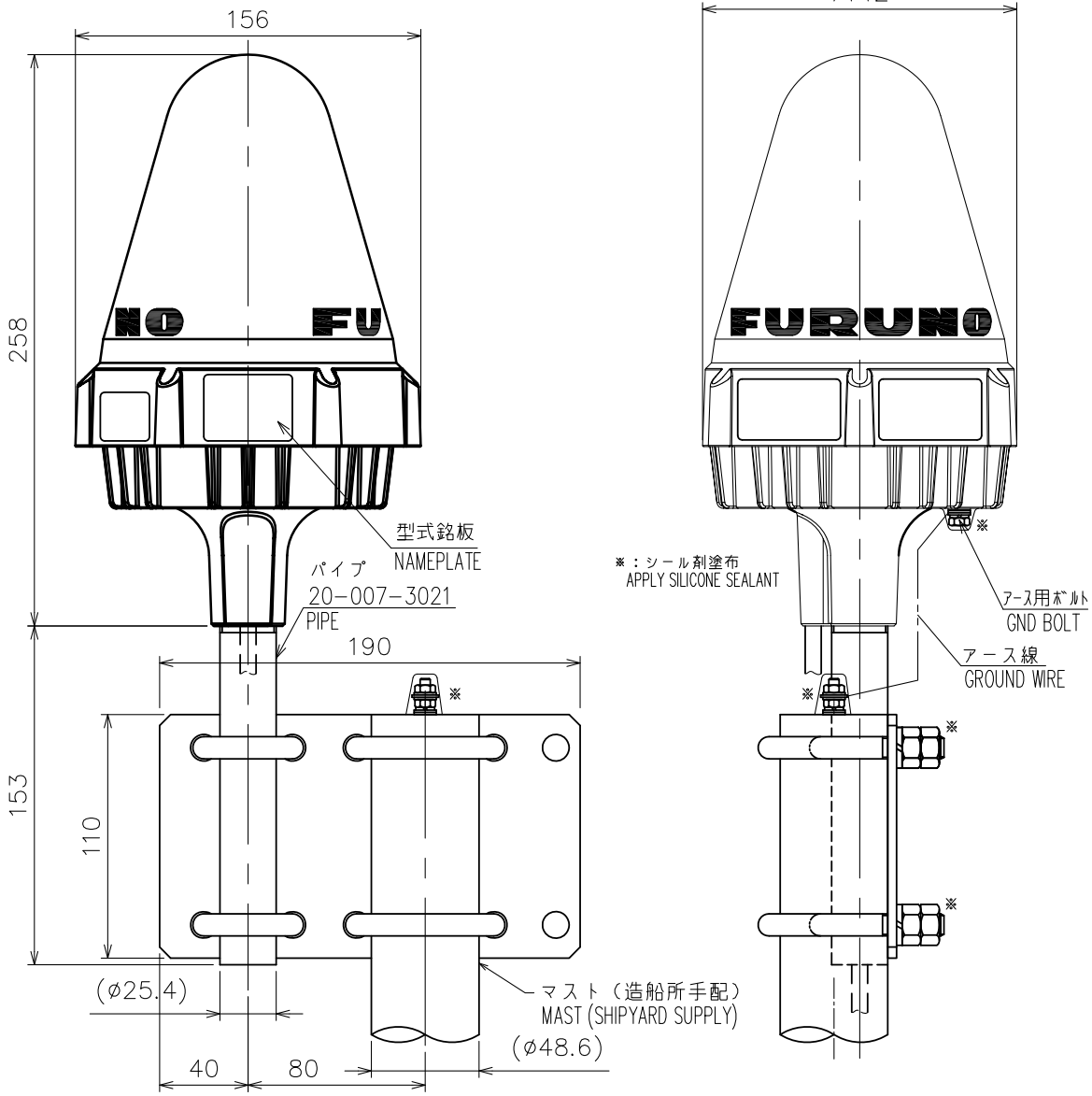

注 記　1）指定外の寸法公差は表 1 による。

NOTE　1.　TABLE 1 INDICATES TOLERANCE OF DIMENSIONS WHICH IS NOT SPECIFIED.

DRAWN 11/Jan/2012 T.YAMASAKI			TITLE IC-115/116
CHECKED 11/Jan/2012 H.MAKI			名称 アンテナユニット（取付板）
APPROVED		FELCOM 15/16	外寸図
SCALE 1/3	MASS 2.3 ±10% kg		NAME ANTENNA UNIT (W/ FIXTURE PLATE)
DWG. No. C5635-G19- B		REF. No. 16-018-101G-2	OUTLINE DRAWING

FURUNO ELECTRIC CO., LTD.

Downloaded from www.Manualslib.com manuals search engine

FURUNO

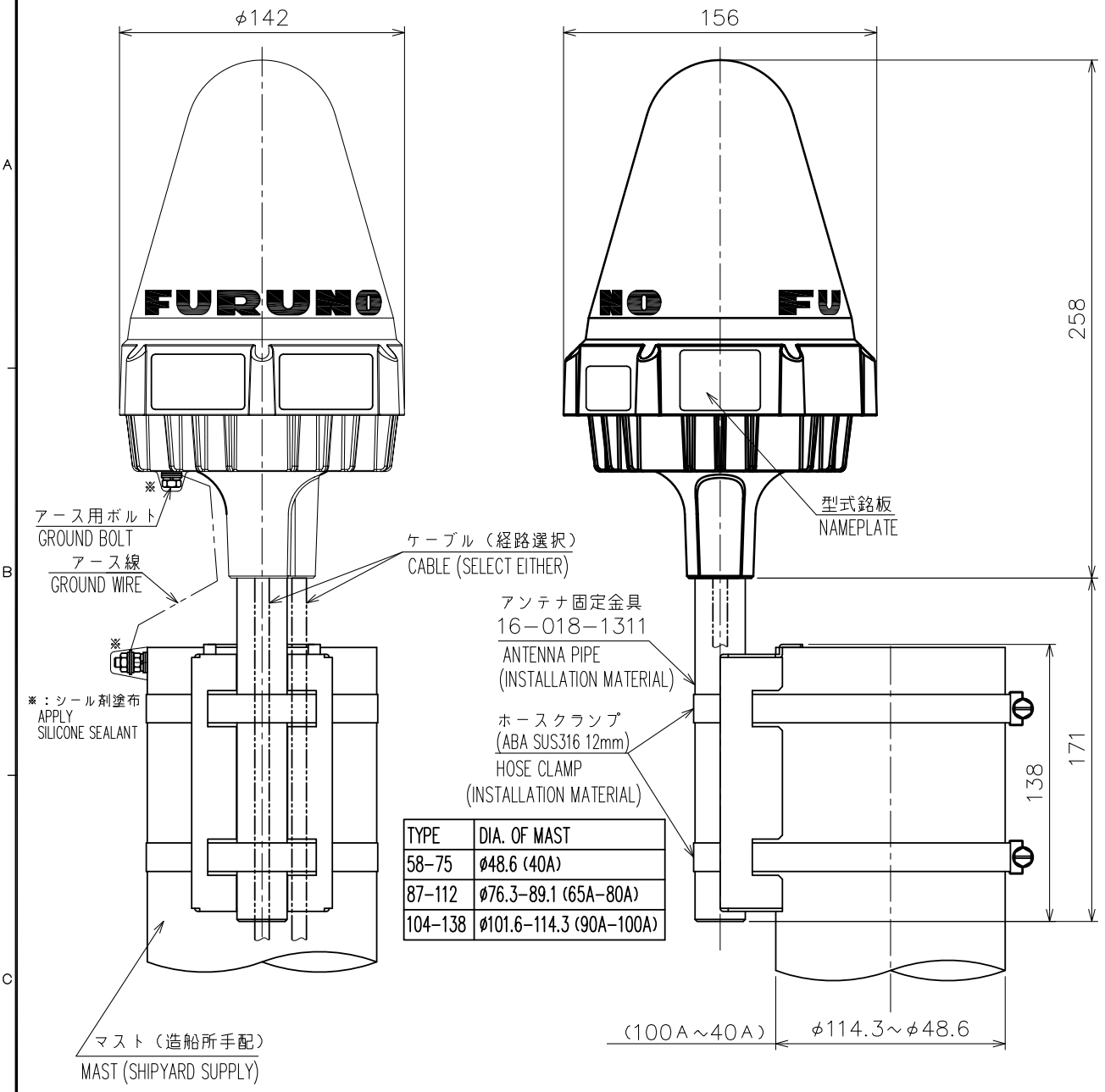

TYPE	DIA. OF MAST
58−75	φ48.6 (40A)
87−112	φ76.3−89.1 (65A−80A)
104−138	φ101.6−114.3 (90A−100A)

注　記　1）指定外の寸法公差は表１による。
　　2）アンテナケーブル経路はパイプ内または外のいずれかを選択。
　　3）対応マスト径は40A（φ48.6）～100A（φ114.3）

NOTE　1. TABLE 1 INDICATES TOLERANCE OF DIMENSIONS WHICH IS NOT SPECIFIED.
　　2. PATH THE ANTENNA CABLE OUTSIDE OR INSIDE THE PIPE.
　　3. MAST DIAMETER: 40A (φ48.6) TO 100A (φ114.3)

表１　TABLE 1

寸法区分（ｍｍ）DIMENSION	公差（ｍｍ）TOLERANCE
Ｌ≦５０	±１．５
５０<Ｌ≦１００	±２．５
１００<Ｌ≦５００	±３

DRAWN 11/Jan/2012 T.YAMASAKI			TITLE IC−115/116
CHECKED 11/Jan/2012 H.MAKI			名称 アンテナユニット
APPROVED		FELCOM 15/16	外寸図
SCALE 1/3	MASS 1.8 ±10% kg	質量は工材を含む MASS INCLUDES INSTALLATION MATERIALS	NAME ANTENNA UNIT
DWG.No. C5635−G20− D		REF.No. 16−018−104G−3	OUTLINE DRAWING

FURUNO ELECTRIC CO., LTD.

Downloaded from www.Manualslib.com manuals search engine

Downloaded from www.Manualslib.com manuals search engine

FURUNO

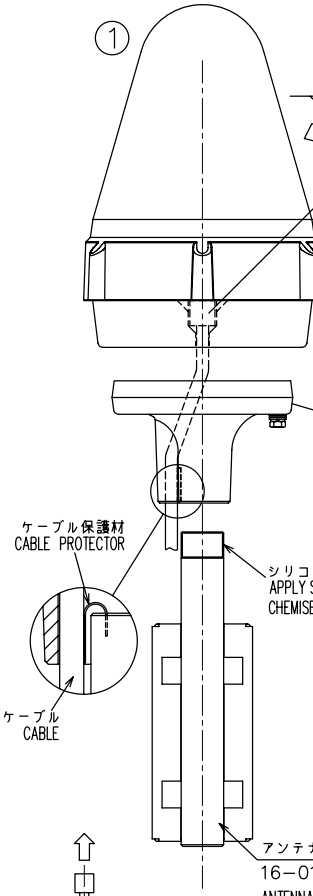

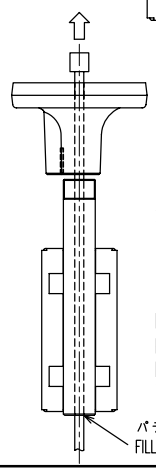

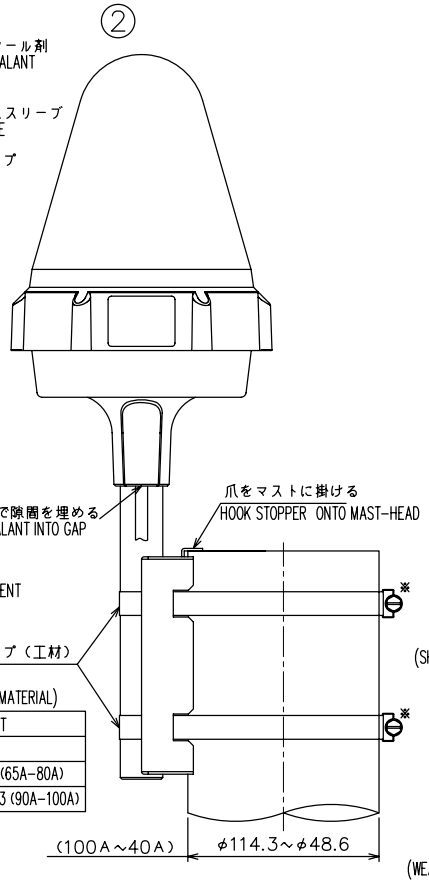

TYPE	DIA. OF MAST
58-75	φ48.6 (40A)
87-112	φ76.3-89.1 (65A-80A)
104-138	φ101.6-114.3 (90A-100A)

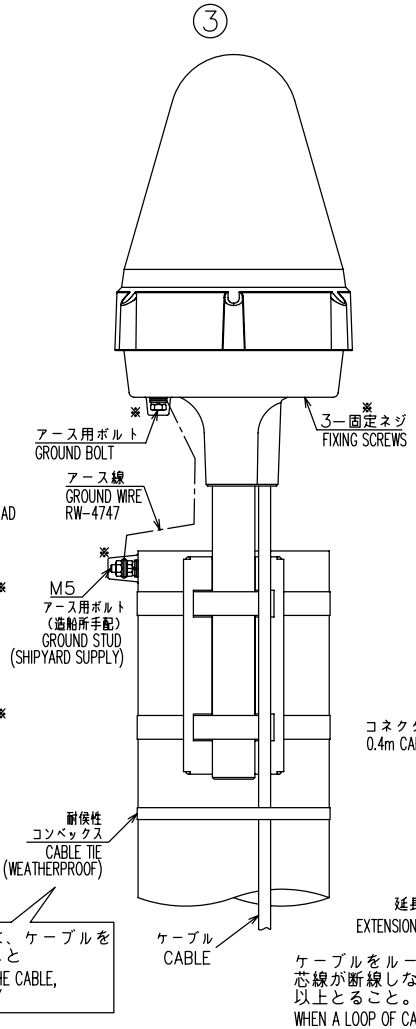

金属製クランプで巻くときは、ケーブルを傷つけないように保護すること
WHEN USE A STEEL CLAMP TO BIND THE CABLE, PROTECT THE CABLE TO AVOID INJURY

手順

1）アンテナベース、イラックススリーブを通して、コネクタプラグをアンテナ上部のコネクタに接続する。
2）イラックススリーブを熱で固着し、ビニルテープで固定する。
3）接続部分にシール剤を塗布する。
4）アンテナベースをアンテナ上部にネジ３本で固定する。
5）ケーブルをケーブル溝に寄せてケーブル保護材で固定する。
6）アンテナ固定金具をアンテナユニットにねじ込む。
7）アンテナ固定金具をホースクランプでマストに固定する。
対応マスト径：40A（φ48.6）～100A（φ114.3）
58−75: 40A（φ48.6）
87−112: 65A（φ76.3）～80A（φ89.1）
104−138: 90A（φ101.6）～100A（φ114.3）
8）ケーブルをマストに固定し、アース線（工材）を布設する。
ケーブル、アース線は耐候性コンベックスで固定する。
9）※部分をシール剤で完全に覆う。

PROCEDURE

1. CONNECT THE CABLE PLUG TO CONNECTOR OF UPPER UNIT THRU BASE UNIT AND SHRINK TUBE.
2. FIX THE SHRINK TUBE WITH HEAT AND BIND WITH VINYL TAPE.
3. APPLY SILICONE SEALANT TO CABLE PLUG.
4. FIX THE BASE UNIT TO UPPER ANTENNA WITH 3 SCREWS.
5. KEEP ASIDE THE ANTENNA CABLE AND ATTACH A CABLE PROTECTOR.
6. SCREW THE ANTENNA MOUNTING PIPE INTO THE ANTENNA BASE.
7. FIX THE ANTENNA MOUNTING PIPE TO MAST BY HOSE CLAMP.
MAST DIAMETER: 40A (φ48.6) ~100A (φ114.3)
58-75 : 40A (φ48.6)
87-112: 65A (φ76.3) ~80A (φ89.1)
104-138: 90A (φ101.6) ~100A (φ114.3)
8. FIX THE ANTENNA CABLE AND GROUND WIRE.
SECURE THEM WITH WEATHERPROOF CABLE TIE.
9. COVER SCREW HEADS MARKED '*' WITH SILICONE SEALANT.

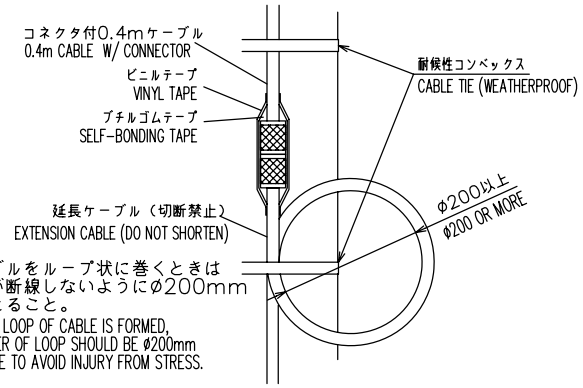

ケーブルをループ状に巻くときは芯線が断線しないようにφ200mm以上とること。
WHEN A LOOP OF CABLE IS FORMED, DIAMETER OF LOOP SHOULD BE φ200mm OR MORE TO AVOID INJURY FROM STRESS.

注記
パイプ内を通してコネクタ付ケーブルを直接接続するときは、アンテナベースを通す前に、固定金具パイプを通すこと。

NOTE
PASS THE CABLE WITH PLUG THRU THE ANTENNA MOUNTING PIPE BEFORE THE ANTENNA BASE WHEN THE CABLE WITH PLUG IS CONNECTED TO ANTENNA UNIT DIRECTLY.

DRAWN 12/Jan/2012 T.YAMASAKI		TITLE	IC-115/116
CHECKED 12/Jan/2012 H.MAKI		名称	アンテナユニット（ホースクランプ取付）
APPROVED 13/Jan/2012 Y.NISHIYAMA	FELCOM 15/16		装備要領
SCALE / MASS ±10% kg		NAME	ANTENNA UNIT (HOSE CLAMP FIXING)
DWG No. C5635-Y01- G			INSTALLATION PROCEDURE

FURUNO ELECTRIC CO., LTD.

FURUNO

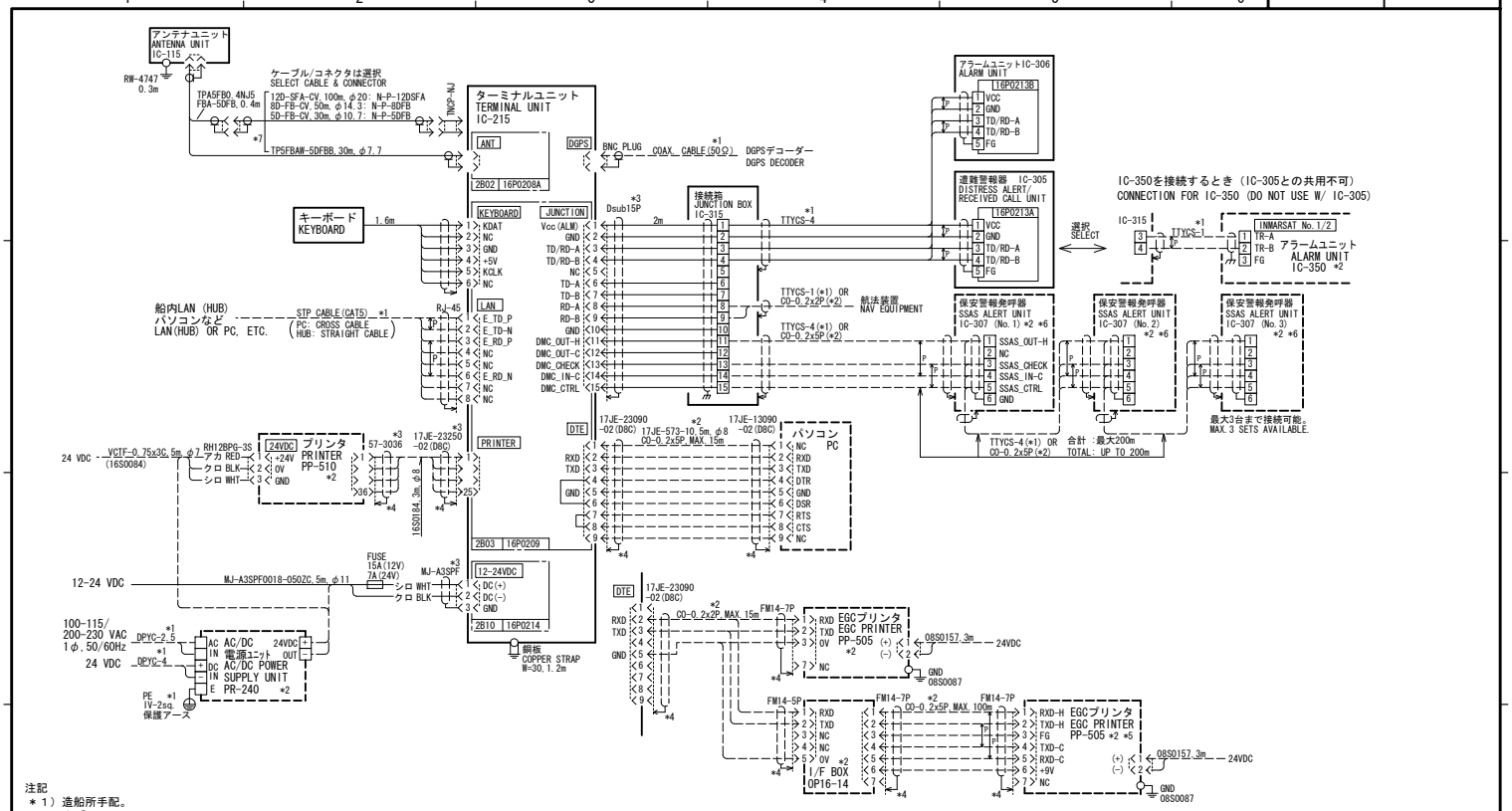

注記
＊1）造船所手配。
＊2）オプション。
＊3）工場にて取付済み。
＊4）コネクタクランプでアースに落とす。
＊5）TB基板（16P0116）が必要。
＊6）終端のIC-307はジャンパー設定を変更する。
＊7）アンテナケーブルは切断して使用しないこと。

NOTE
*1. SHIPYARD SUPPLY.
*2. OPTION.
*3. FITTED AT FACTORY.
*4. GROUND THRU CONNECTOR CLAMP.
*5. TB BOARD (16P0116) REQUIRED.
*6. CHANGE SETTING OF JUMPER IN IC-307 TO TERMINATE.
*7. DO NOT SHORTEN ANTENNA CABLE.

CO-0.2x2P: CO-SPEVV-SB-C 0.2x2P.φ10.5
CO-0.2x5P: CO-SPEVV-SB-C 0.2x5P.φ13.5

DRAWN 30/Mar/2010 T.YAMASAKI		TITLE	FELCOM 15
CHECKED 30/Mar/2010 T.TAKAHASHI		名称	インマルサットC船舶地球局
APPROVED			相互結線図
SCALE / MASS kg		NAME	INMARSAT-C MES
DWG No. C5635-C01- S			INTERCONNECTION DIAGRAM

FURUNO ELECTRIC CO., LTD.

Downloaded from www.Manualslib.com manuals search engine

Other ManualsLib Projects

www.manualslib.com

www.manualslib.de

www.manualslib.es

www.manualslib.fr

www.manualslib.nl

www.manualslib.mx

www.manualslib.tech 30+ Languages