Manualslib.com - The Global Manuals Library

SPERRY MARINE 5016-CA REPEATER OPERATION, INSTALLAION AND SERVICE MANUAL

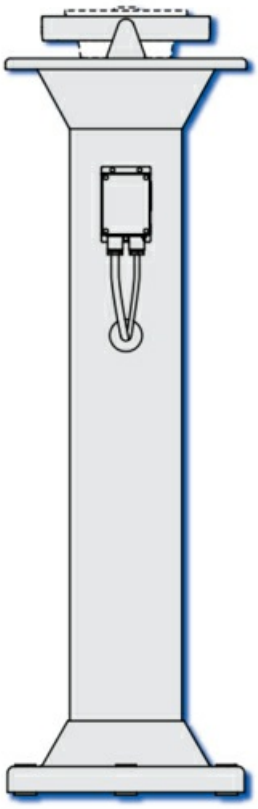

Quick Links

Bearing Repeater

Synchronizing the Compass Cards

Table of Contents

Table of Contents
Safety Instructions
Safety Notice Conventions
General Safety Information for the Operator
General Safety Information for Service Personnel
System Description
Intended Use
Not Intended Use
Design and Main Features
Functional Description
Compass Repeater Type Variants
Bearing Repeater
Steering Repeater
Magnetic Heading Repeater
Bulkhead Repeater
Accessories
Bearing Repeater Stand and Brackets
Bulkhead Repeater Bracket
Connection Box
Azimuth Device PV 23
Telescopic Alidade
Technical Data
Declaration of Conformity
Readout Elements, Indicators and Controls
Powering up the Repeaters
Data Protocol and Source Detection
Reading off Heading and Source Indication
Adjusting the Illumination Brightness

Synchronizing the Compass Cards
Initiating the Self Test
Bearing Repeater Capacitive Keys
Taking Bearings with the Azimuth Device PV 23
Error Blink Codes
Heading Timeout with flashing Source Indicator
Maintenance by Shipboard Personnel
Maintenance of externally installed Bearing Repeater
Bearing Repeater
Installing Bearing Repeater with Bearing Stand
Installing Bearing Repeater with Bearing Bracket
Installing Bearing Repeater with Adjustable Bearing Bracket
Steering Repeater / Magnetic Heading Repeater
Bulkhead Repeater
Using the Default Configuration
Configuring the Analogue Repeater with SUSI
Configuration Parameters
RCS Type
Protocol Type
Baudrate
Gyro Selection
Magnetic Selection
Status Selection
Dimming Selection
Dimming Group ID
Dimming Offset
Dimming Values
Adjusting Dimming Values
Serial Dimming Command Evaluation
Basic Service Checks
All repeater types 5016-CA, -CB, -CC, -CD

All repeaters, except bearing repeater, type 5016-CA
Viewing Error Information in SUSI
Analogue Repeater Error Page
Error IDs and Descriptions
Location of Parts on the Analogue Repeater PCB
Terminal Boards and Connectors
Diagnostic LEDs
Updating the Repeater's Firmware
Update Procedure
Other ManualsLib Projects

Sperry Marine

NORTHROP GRUMMAN

Operation, Installation and Service Manual

Original Documentation / Keep for Future Reference

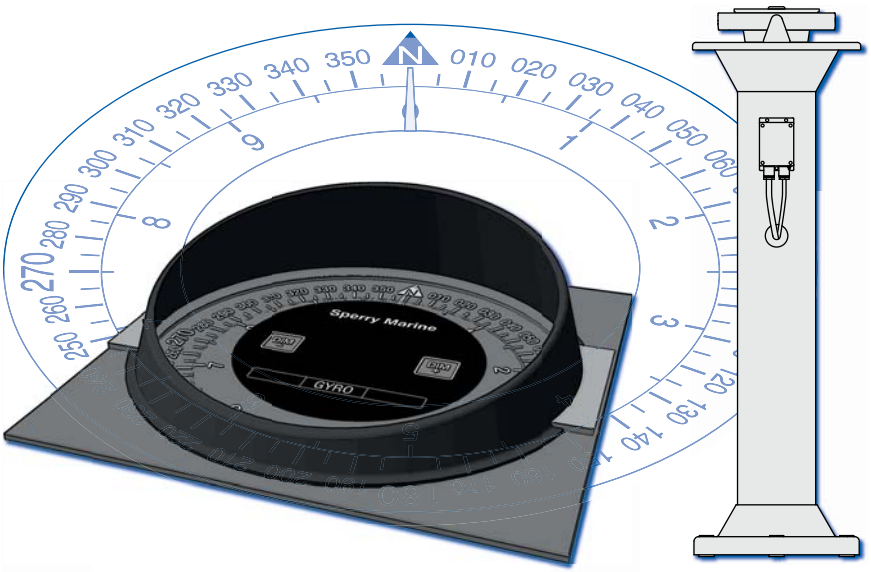

Analogue Compass Repeaters
Types 5016-CA, 5016-CB, 5016-CC, 5016-CD

with RS-422 Serial Interface

056376/A; 05016-0128-02, 03 Feb 2015

Northrop Grumman Sperry Marine B.V. (Representative Office)
Woltmanstr. 19 • D-20097 • Hamburg, Germany
Tel.: +49-40-299 00-0 • Fax: +49-40-299 00-146 • E-mail: service.eu@sperry.ngc.com

© 2015 Northrop Grumman Sperry Marine B.V.
This document and the information herein is the intellectual property of Northrop Grumman Sperry Marine B.V. [NGSM BV] and it's associate companies and may not be copied, reproduced or translated without the express permission of NGSM BV.
Specifications were correct at time of press but may be varied in accordance with NGSM BV's policy of continuous product development.
Any technical content should be verified with NGSM BV.

Sperry Marine, with major engineering and support offices in New Malden, England, and Hamburg, Germany, is part of the Northrop Grumman Navigation & Maritime Systems Division N&MSD.

Rev.	Date	Remarks
A	03 Feb 2015	Initial release; this manual applies for the analogue compass repeaters types 5015-CA, -CB, -CC and -CD. Manual 056359 remains valid for the now discontinued types 5016, 5016-AA, -AB and -AC.

Contents

Safety Instructions

Safety Notice Conventions ..... **vii**

General Safety Information for the Operator ..... **viii**

General Safety Information for Service Personnel ..... **x**

Chapter 1: Introduction

1.1 System Description **1-1**
Intended Use 1-1
Not Intended Use 1-1

1.2 Design and Main Features **1-2**

1.3 Functional Description **1-3**

1.4 Compass Repeater Type Variants **1-4**
Bearing Repeater 1-4
Steering Repeater 1-4
Magnetic Heading Repeater 1-4
Bulkhead Repeater 1-5

1.5 Accessories **1-5**
Bearing Repeater Stand and Brackets 1-5
Bulkhead Repeater Bracket 1-5
Connection Box 1-6
Azimuth Device PV 23 1-6
Telescopic Alidade 1-6

1.6 Technical Data **1-7**

1.7 Declaration of Conformity **1-15**

Chapter 2: Operation

2.1 Readout Elements, Indicators and Controls **2-1**

2.2 Powering up the Repeaters **2-2**

2.3 Data Protocol and Source Detection **2-2**

2.4 Reading off Heading and Source Indication **2-3**

2.5 Adjusting the Illumination Brightness **2-4**

2.6 Synchronizing the Compass Cards **2-5**

2.7 Initiating the Self Test **2-5**

2.8 Bearing Repeater Capacitive Keys **2-5**

2.9 Taking Bearings with the Azimuth Device PV 23 ..... **2-6**

Chapter 3: Error Indication

3.1 Error Blink Codes **3-1**
Heading Timeout with flashing Source Indicator 3-2

Chapter 4: Preventive Maintenance

4.1 Maintenance by Shipboard Personnel 4-1
Maintenance of externally installed Bearing Repeater 4-2

Chapter 5: Installation

5.1 Bearing Repeater 5-1
Installing Bearing Repeater with Bearing Stand 5-1
Installing Bearing Repeater with Bearing Bracket 5-4
Installing Bearing Repeater with Adjustable Bearing Bracket 5-6

5.2 Steering Repeater / Magnetic Heading Repeater 5-8

5.3 Bulkhead Repeater 5-10

Chapter 6: Configuration

6.1 Using the Default Configuration 6-1

6.2 Configuring the Analogue Repeater with SUSI 6-1

6.3 Configuration Parameters 6-6
RCS Type 6-7
Protocol Type 6-8
Baudrate 6-8
Gyro Selection 6-9
Magnetic Selection 6-9
Status Selection 6-10
Dimming Selection 6-10
Dimming Group ID 6-10
Dimming Offset 6-11

6.4 Dimming Values 6-12
Adjusting Dimming Values 6-12
Serial Dimming Command Evaluation 6-13

Chapter 7: Troubleshooting

7.1 Basic Service Checks 7-1
All repeater types 5016-CA, -CB, -CC, -CD 7-1
All repeaters, except bearing repeater, type 5016-CA 7-2

7.2 Viewing Error Information in SUSI 7-3
Analogue Repeater Error Page 7-3
Error IDs and Descriptions 7-4

7.3 Location of Parts on the Analogue Repeater PCB 7-6
Terminal Boards and Connectors 7-7
Diagnostic LEDs 7-7

Chapter 8: Corrective Maintenance

8.1 Updating the Repeater's Firmware 8-1
Update Procedure 8-2

Abbreviations

Appendix

A Setup and Configuration Tables

B Drawings

Safety Instructions

Safety Notice Conventions

The following safety notice conventions are followed throughout this manual:

DANGER

A **Danger** notice contains an operating or maintenance procedure, practice, condition, statement, etc., which, if not strictly observed, **will result in injury or death of personnel.**

WARNING

A **Warning** notice contains an operating or maintenance procedure, practice, condition, statement, etc., which, if not strictly observed, **could result in injury or death of personnel.**

CAUTION

A **Caution** notice contains an operating or maintenance procedure, practice, condition, statement, etc., which, if not strictly observed, **could result in damage to, or destruction of equipment.**

Note

A **Note** contains an essential operating or maintenance procedure, condition or statement, which is considered important enough to be highlighted.

Special safety symbols may be used in this manual to indicate:

DANGER

Danger: Risk of electrical shock.

CAUTION

Caution: Components are sensitive to electrostatic discharge.

General Safety Information for the Operator

WARNING

Risk of Deviation
Never rely on the heading indication of an analogue compass repeater alone to navigate a vessel or to perform other safety-critical operations. The analogue repeater is an indicator only and will indicate ship's heading as long as it receives formally valid data. It does not apply any filtering or plausibility checks of the incoming data.
Loss of data supply will result in a visual error indication but will not raise an audible alarm.
Always confirm the plausibility of the heading indication at the repeater against the respective source which generates the heading data.
In safety-critical operations, regularly check the data source and the repeater's indication against all available aids to navigation.

WARNING

Risk of using magnetic heading data for steering
The magnetic heading repeater is equipped with a removable cover, hiding the compass card when navigating the vessel under normal use, as the magnetic heading repeater is only classified for steering purposes in case of emergency with other heading sources not available.
Never remove the cover from the magnetic heading repeater when navigating the vessel under normal use, to avoid steering the vessel mistakenly by magnetic compass heading.

WARNING

Risk of using invalid heading data
The heading indication at the repeater is only valid if the error indicator is off and exactly one of the source indicators is permanently lit.
In case the error indicator in on and one or all of the source indicators are flashing the heading indication of the repeater must be considered as invalid and the heading data must not be used for steering the vessel.

WARNING

Risk of injury
Permanent eye damage may result, when looking directly at the sun or at its reflection in the black azimuth mirror when using the azimuth device PV 23.
The PV 23 is not suited for taking the azimuth of the sun itself, as the anti-glare filters do not sufficiently block out direct sunlight.
Never look directly at the sun or at its reflection in the black azimuth mirror when using the azimuth device PV 23.

WARNING

Risk of freeze
The bearing repeater 5016-CA is equipped with capacitive keys, sensitively reacting to the fingers skin resistance which will not function when touched with gloves.
In case of minus temperatures always be extremely careful not to touch the metal housing of the bearing repeater to avoid freeze of hands and fingers.

Note

The capacitive keys of the bearing repeater 5016-CA are sensitive against surface water, e.g. remaining rain drops, which may result in random changing of the illumination brightness.
This effect does not have any impact on the functionality or handling of the capacitive keys.

CAUTION

Risk of damage though solar radiation
The bearing repeater 5016-CA is equipped with a cover plate for protection against solar radiation.
It is recommended to always protect the bearing repeater with the cover plate when not in use.

CAUTION

Risk of damage
The cover plate, protecting the bearing repeater 5016-CA against solar radiation, must never be touched with tools to avoid any damage.
Always install and remove the cover plate with bare hands only.

CAUTION

Risk of damage through wrong cleaning agent
The front plates of the compass repeaters are sensitive against aggressive cleaning agents as organic solvents or acetone.
Do not clean the front plate with organic solvents, acetone or any other aggressive cleaning agent.
Use only water and soap or a mild detergent to clean the front plate.

CAUTION

Risk of unnecessary wear
The bearing repeater 5016-CA can optionally be equipped with a watertight plastic cover for protection against environmental conditions.
It is recommended to always protect the bearing repeater with the plastic cover when not in use.

CAUTION

Risk of damage
The prismatic azimuth device PV23 and the telecopic alidade are not designed to stay permanently mounted on the bearing repeater.
Leaving the PV23 or the alidade on the bearing repeater after usage, will cause wear and damage to the equipment.
Always remove the PV23 or the alidade from the bearing repeater and store it carefully away in its storage box.

Note

The repeater compasses do not possess an audible alarm indicator.

Note

Sperry Marine Service:
In case of service refer to **www.sperrymarine.com/offices** for a list of all Sperry Marine Offices and Service Agents worldwide.

General Safety Information for Service Personnel

CAUTION

Risk of wrong installation
Wrong positioning of the bearing stand will obstruct to take bearings.
Always make sure that the bearing stand is so positioned that the vessel's superstructure does not unduly obstruct the view of the horizon.
In case one bearing stand does not allow to take bearings in a full circle of 360°, a second bearing stand must be installed for compensation.

CAUTION

Risk of damage
The compass repeaters are heavy instruments. The compass repeater cables are not designed for holding the repeater just with the cable.
Never hold or transport the repeater on the cable alone when installing or wearing a compass repeater.

CAUTION

Risk of damage
The bearing repeater is a heavy instrument.
To avoid any damage during installation of the bearing repeater into the gimbal ring, the installation should be carried out by two service persons.

CAUTION

Risk of malfunction
Do not lengthen the cable between the bulkhead repeater and the connection box as the USB service port will not work reliably.
If the connection box cannot be installed at an accessible location close to the repeater, it will be required to unmount and disassemble the repeater to gain access to the internal USB receptacle when configuring or servicing the device.
If the repeater cable is connected directly to shipside terminals, the external USB port may not be used and its four wires must be connected to blind terminals.

CAUTION

Risk of damage through unauthorized service
The housing of the bearing repeater 5016-CA is designed for increased watertightness and shall therefore not be opened in the field.
Opening the housing in the field will diminish the watertightness and may lead to condensation forming on the inside surfaces, especially the top glass, at a later point in time.
Never open the bearing repeater housing in the field.
Always return a defective bearing repeater to Sperry Marine.

CAUTION

Risk of damage through unauthorized service
The analogue compass repeaters are complex electronic devices, which are not serviceable in the field down to the level of individual circuit components.
Defective units must be sent back to Sperry Marine for repair.

CAUTION

Risk of damage of electrostatic-discharge-sensitive components
The analogue compass repeaters contain electrostatic sensitive components. Electrostatic discharge may permanently damage components.
When servicing an analogue compass repeater, take precautions to prevent electrostatic discharge. Avoid touching any of the electronic circuitry.

CAUTION

Risk of parameter settings loss
It cannot be guaranteed that the repeater's configuration parameter settings are left intact during a firmware update.
Before updating firmware, record all parameter settings to be able to re-enter them manually, if required.

Note

The analogue compass repeaters are serviced and configured using the Sperry Universal Setup Instrument (SUSI).
This tool is provided to authorized service personnel only and is generally not available to end-customers.

Note

Exact voltage levels must be checked with a voltmeter true RMS.
The data content on serial I/O lines must be checked with the aid of suitable analysing tools, such as PC-based protocol interpreters or terminal programs.

Chapter 1: Introduction

1.1 System Description

Intended Use

The analogue compass repeaters are remote heading indicators which display ship's heading (secondary heading data), provided by a connected gyrocompass as active heading source (primary heading data), and must only be operated from appropriately trained and educated personnel familiar with all mandatory safety and operating procedures.

The prismatic azimuth device PV23 is a classified compass bearing device designed for usage together with the bearing repeater 5016-CA.

Not Intended Use

The analogue compass repeaters are not allowed to be used for the navigation of inland water vessels and river boats. Any exception to this restriction must be regulated by specific certification of an entitled organisation or administration, for further details see certification information under 'Design and Main Features" on page 1-2 and 'Declaration of Conformity" on page 1-15.

The magnetic heading repeater, type 5016-CC, is only classified for steering purposes in case of emergency when the gyrocompass(es) as primary heading source(s) are not available and must not be used for navigating the vessel under normal conditions.

The telescopic alidade, stock no 60280, is not type approved as compass bearing device, therefore it cannot be used to fulfil the carriage requirements.

1.2 Design and Main Features

The analogue compass repeaters are remote heading indicators which display ship's heading (secondary heading data), provided by a connected gyrocompass as active heading source (primary heading data), using a rotating compass card assembly.

The repeaters are available in four type variants:

- Bearing Repeater, Type 5016-CA
- Steering Repeater, Type 5016-CB
- Magnetic Heading Repeater, Type 5016-CC
- Bulkhead Repeater, Type 5016-CD

The analogue compass repeaters have been type-approved by Germanischer Lloyd (GL), in accordance with the Maritime Equipment Directive (MED) 96/98/EC as amended, as

gyrocompass accessory equipment

in the type approval certificates of the
Sperry Marine gyrocompass systems
NAVIGAT X MK 1 (certificate no. 94418-10HH, 94428-10HH),
NAVIGAT X MK 2 (certificate no. 94420-10HH),
NAVIGAT 2100 (certificate no. 94416-10HH, 94426-10HH)and
NAVIGAT 3000 (certificate no. 37757-12HH, 37957-12HH).

The analogue compass repeaters comply with the following specified standard as gyrocompass accessory equipment:
IMO resolution MSC.116(73).
For further details see "Declaration of Conformity" on page 1-15.

Heading data is received at an RS-422 serial data input, using the NMEA 0183/IEC 61162 or the Plath binary protocol. The repeaters are able to auto-detect the input data protocol and baudrate at power-up and will self-synchronize with the input heading received.

Depending on the currently active heading source, the repeaters will indicate true heading from a gyrocompass (GYRO), or a transmitting heading device (THD[1]), or magnetic compass heading (raw or corrected for deviation and/or variation) from a magnetic compass (MAG). The active source is constantly highlighted at the repeater by a backlit indicator ("GYRO, "THD" or "MAG").

Graduations and numbering of the cards' scales appear white on a matte black background. The cards are backlit by dimmable white LEDs. A set of dimmer push buttons is integrated into the repeater front plate of the steering repeater, type 5016-CB, magnetic heading repeater, type 5016-CC and the Bulkhead Repeater, type 5016-CD whereas the bearing repeater, type 5015-CA, is designed with a new glass front and capacitive dimmer keys instead.

All repeater variants feature a 360° and a 10° compass card, except for the magnetic heading repeater, where the 10° card is not assembled.

1. In the context of this manual, "THD" refers to a transmitting heading device according to IMO MSC.116(73) or IEC 22090 parts 1-3 respectively.

The magnetic heading repeater, type 5016-CC, is preconfigured to indicate magnetic compass heading only, regardless of which source is currently active.

The magnetic heading repeater is equipped with a removable cover, hiding the compass card when navigating the vessel under normal use, as the magnetic heading repeater is only classified for the indication of magnetic heading data in case of emergency when the gyrocompass(es) as primary heading source(s) are not available and the vessel is actually steered by magnetic compass heading.

1.3 Functional Description

The compass card assembly is driven through a gear train by a stepper motor. To ensure smooth and silent operation, the microprocessorized motor control uses micro stepping. Photo interrupters detect when the compass cards pass their zero positions at 360° and every 10°, respectively, allowing minor step losses to be automatically corrected during operation.

Once valid heading data is received, the heading to be indicated is translated into a counter value representing the required compass cards' offset from the North (zero) position. A second counter is maintained for the cards' current offset.
The motor control constantly executes a routine to minimize the difference between these two offsets, thus making the compass cards follow-up to the heading to be indicated.

The position of the cards is held in non-volatile memory, so that it is not normally required to zero (re-synchronize) the cards upon power-up.

1.4 Compass Repeater Type Variants

Bearing Repeater

The bearing repeater, type 5016-CA, is gimbal-mounted for usage in a bearing stand or in a repeater bracket attached to a bulwark. The bowl-shaped watertight housing with new glass front permits installation at exposed locations. The new capacitive keys of the bearing repeater front increase additionally the watertightness of the housing.

Note

The capacitive keys of the bearing repeater 5016-CA are sensitive against surface water, e.g. remaining rain drops, which may result in random changing of the illumination brightness.
This effect does not have any impact on the functionality or handling of the capacitive keys.

The bearing repeater is equipped with a cover plate against solar radiation. For optimum protection and long term usage without unnecessary wear, a watertight cover protecting against environmental conditions is available as an optional accessory for the bearing stand.

In addition to the regular heading scales, the bearing repeater features an azimuth scale on the 360° card and a graduated verge ring for taking absolute and relative bearings with the azimuth device PV 23 (optional accessory).

Steering Repeater

The steering repeater, type 5016-CB, is the type variant most commonly used as steering compass repeater on the bridge.
It is suitable for direct console mounting or mounting in a console frame and may be installed horizontally, vertically or inclined.
The steering repeater is normally installed at a protected location. It may be installed at an exposed location if directly mounted to the console using a watertight seal.
The repeater is equipped with a removable sun shade.

Magnetic Heading Repeater

The magnetic heading repeater, type 5016-CC, designed for console mount, is preconfigured to permanently indicate magnetic compass heading only.
It possesses no 10° card. Instead, the 360° card is graduated every 1°.
The magnetic repeater is to be used only as an emergency steering repeater in case of failure of the gyrocompass(es).
To prevent its indication from being mistaken for the reference to steer by, the magnetic repeater is equipped with a removable cover, which should be removed only in case of failure of the gyrocompass(es), when the vessel is actually steered by magnetic compass heading.

Bulkhead Repeater

The bulkhead repeater, type 5016-CD, is equipped with the same compass card assembly as the steering repeater. It is suitable for mounting onto a bulkhead or other flat surface, vertically, horizontally or inclined. An optional mounting bracket is available to install the repeater at an inclined angle relative to the mounting surface.
The watertight housing permits installation at exposed locations without an additional hood or cover.

1.5 Accessories

Bearing Repeater Stand and Brackets

The bearing repeater stands, type 4622-AC and -AD, comprise a base, column and flared top rim in one integral part. It is made of a welded aluminium alloy and is powder-coated. The repeater gimbal ring is held in two bearing supports attached to the top rim.

- When the repeater is installed in bearing repeater stand 4622-AC, its working height is 1.45 m.
- When the repeater is installed in bearing repeater stand 4622-AD, its working height is 1.30 m.

The connection box, 4894-AD, is attached to the stand's column.
An optional watertight cover is available to protect the bearing repeater from the elements.

The bearing repeater bracket type 4890 is made of a welded aluminium alloy and is powder-coated. It is to be fitted to a bulwark or other vertical surface. The installation height of the bracket determines the repeaters working height.
The connection box, 4894-AD, is attached to the side of the bracket.

The adjustable bearing repeater bracket type 4905 is made of aluminium alloy and is powder-coated. It is to be fitted to a bulwark or other vertical surface. The height-adjustable bracket arms permit to vary the repeater's working height in three steps within a range of 250 mm.
The connection box, 4894-AD, is attached to the bracket's mounting plate.

Bulkhead Repeater Bracket

The swivelling bulkhead repeater bracket is made of powder-coated sheet metal. It permits to install the repeater at an inclined angle relative to the mounting surface, e.g. when it is mounted high up a bulkhead or on a ceiling. The angle is adjustable within a range of 45°.

Connection Box

The connection box, type 4894-AD, a stainless steel box with cable glands, is for connecting the bearing repeater and bulkhead repeater to the gyrocompass system. It is either attached to the repeater stand's column, or to the side of the bracket/bracket's mounting plate.

The connection box holds as well the standard USB type B receptacle for service purposes.

Azimuth Device PV 23

The prismatic azimuth device PV 23 (type no. 2535) is a vane-type azimuth device, classified as compass bearing device to be used in combination with the bearing repeater, type 5016-CA.
It is suitable for taking absolute and relative bearings of terrestrial objects and of celestial bodies (stars and planets).

The near sight vane is equipped with a prism mirror to read absolute bearings off the compass card and two coloured anti-glare filters.
An index mark at the near side of the PV 23 is used to read relative bearings off the repeater's verge ring scale.

The far sight vane is equipped with a wire sight and with a pivoting black azimuth mirror to pick up the reflections of objects at high elevation, i.e. terrestrial bodies.

For more details see "Taking Bearings with the Azimuth Device PV 23" on page 2-6.

Telescopic Alidade

The telescopic alidade, stock no 60280, not classified as compass bearing device in combination with the bearing repeater, type 5016-CA, for classified vessels, may also become used with the bearing repeater for taking bearings on non classified ships only.

It is suitable for taking absolute and relative bearings of magnified terrestrial objects and celestial bodies (stars and planets).

For more details see the separate operation manual of the telescopic alidade 056339.

1.6 Technical Data

Common Features, all Repeater Types

Environmental Requirements	
ambient temperature, operation	-25 °C – +55 °C
ambient temperature, storage	-25 °C – +70 °C

Power Supply	
supply voltage	24 VDC
max. ripple content	±4 Vpp; extreme values may not exceed 36 V or fall below 18 V
power consumption	6 W max.

Readout Elements	
compass cards	colour: white on black illumination: LED backlight, white
card system follow-up speed	≥ 30°/s
max. error of indication	±0.1° at rest, ±0.5° at turn ≤ 20°/s
lubber line	illuminated pointer, yellow

Data Input	
protocol	NMEA 0183 / IEC 61162 at 4800, 9600, 19200, or 38400 Bd., 8N1, or Plath binary, 9600 Bd., 8N1
evaluated IEC 61162 sentences gyrocompass heading magnetic compass heading heading from THD nav. status (active source) central dimming command	 $--THS, $--HDT (talker ID not HC or GP) $HCHDT, $HCHDM, $HCHDG $GPTHS, $GPHDT $PPLAN, $PPNSD (proprietary) $--DDC or $PPLAI (proprietary)

Service I/O Port	
USB service port	Standard USB type B receptacle for connection to a Windows host PC using a vendor-specific USB communications device class driver, directly accessible at the back side of types 5016-CB and -CC. For types 5016-CA and -CD the USB receptacle is accessible inside the connection box housing. The analogue compass repeater is accessed via the “SUSI” application, using a proprietary data protocol.

Bearing Repeater, Type 5016-CA

Environmental Requirements

protection grade	IP 56 to DIN EN 60529
environmental conditions / EMC	according to IEC 60945, equipment category “exposed to the weather”

Magnetic Clearance

to standard magnetic compass	0.80 m
to steering magnetic compass	0.50 m
reduced, to standard magnetic compass	0.50 m
reduced, to steering magnetic compass	0.30 m

Readout Elements

360° card diameter scale graduations heading scale, numbering azimuth scale, numbering 10° card diameter graduation numbering	172 mm outer: every 1°; inner: every 5° every 10° every 5° 130 mm every 0.5° every 1°
verge ring diameter colour graduation numbering	225 mm white on black every 1° every 10°

Controls

Capacitive keys	

Dimensions and Weight

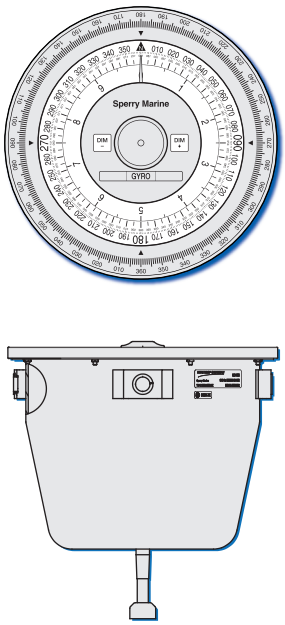

diameter at top (verge ring outer dia.)	225 mm
height	165 mm
depth	173 mm
weight	5.5 kg
free cable length	2 m

Steering Repeater, Type 5016-CB

Environmental Requirements

protection grade front side back	 IP 56 to DIN EN 60529 IP 23 to DIN EN 60529
environmental conditions / EMC installed in console frame console-mounted, with seal	according to IEC 60945, equipment category “protected from the weather” in accordance with IEC 60945, equipment category “exposed to the weather”

Magnetic Clearance

to standard magnetic compass	0.75 m
to steering magnetic compass	0.50 m
reduced, to standard magnetic compass	0.45 m
reduced, to steering magnetic compass	0.30 m

Readout Elements

360° card diameter graduation numbering 10° card diameter graduation numbering	172 mm every 5° every 10° 130 mm every 0.5° every 1°

Controls

Push buttons	

Dimensions and Weight

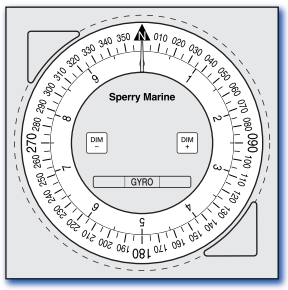

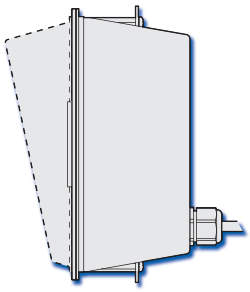

width	192 mm
height	192 mm
installation depth below front plate	approx. 125 mm (including clearance required for cable)
projection of sun shade from front plate	52 mm
weight	1.25 kg
free cable length	3 m

Magnetic Heading Repeater, Type 5016-CC

Environmental Requirements

protection grade front side back	 IP 56 to DIN EN 60529 IP 23 to DIN EN 60529
environmental conditions / EMC installed in console frame console-mounted, with seal	according to IEC 60945, equipment category “protected from the weather” in accordance with IEC 60945, equipment category “exposed to the weather”

Magnetic Clearance

to standard magnetic compass	0.75 m
to steering magnetic compass	0.50 m
reduced, to standard magnetic compass	0.45 m
reduced, to steering magnetic compass	0.30 m

Readout Elements

360° card diameter graduation numbering	 172 mm every 1° every 10°

Controls

Push buttons	

Dimensions and Weight

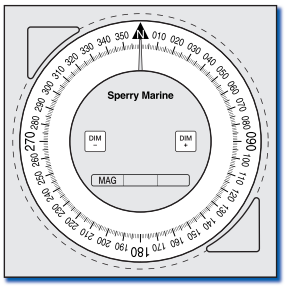

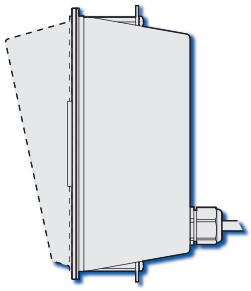

width	192 mm
height	192 mm
installation depth below front plate	approx. 125 mm (including clearance required for cable)
projection of cover from front plate	52 mm
weight	1.25 kg
free cable length	3 m

Bulkhead Repeater, Type 5016-CD

Environmental Requirements

protection grade	IP 56 to DIN EN 60529
environmental conditions / EMC	according to IEC 60945, equipment category “exposed to the weather”

Magnetic Clearance

to standard magnetic compass	0.70 m
to steering magnetic compass	0.40 m
reduced, to standard magnetic compass	0.45 m
reduced, to steering magnetic compass	0.30 m

Readout Elements

360° card	
diameter	172 mm
graduation	every 5°
numbering	every 10°
10° card	
diameter	130 mm
graduation	every 0.5°
numbering	every 1°

Controls

Push buttons	

Dimensions and Weight

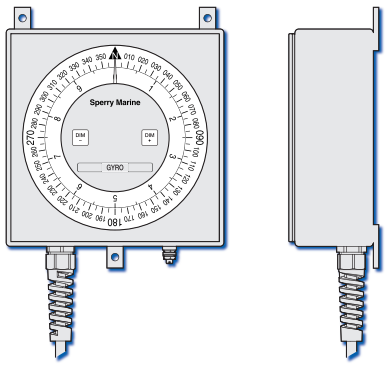

width	200 mm
height	240 mm
depth	83 mm
weight	2.5 kg
free cable length	3 m

Bearing Stand, Type 4622

Dimensions and Weight

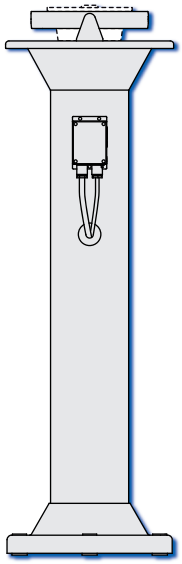	diameter, top rim	444 mm
	height, type 4622-AC type 4622-AD	1450 mm 1300 mm
	weight	10 kg

Bearing Repeater Bracket, Type 4890

Dimensions and Weight

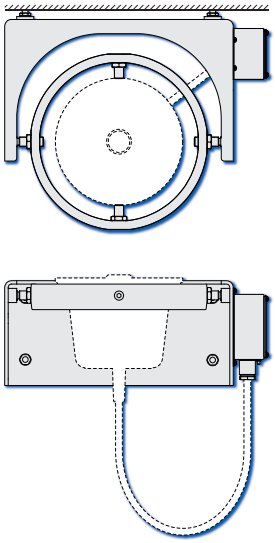	width	462 mm (including connection box fitted to right or left hand side)
	depth	390 mm
	height	185 mm
	weight	5.2 kg

Adjustable Bearing Repeater Bracket, Type 4905

Dimensions and Weight

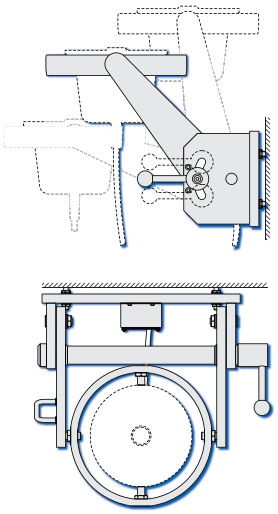

width	512 mm
depth lowest position highest position	 560 mm 308 mm
height lowest position highest position	 231 mm 481 mm
weight	16.5 kg

Bulkhead Repeater Bracket, Stock No. 26857

Dimensions and Weight

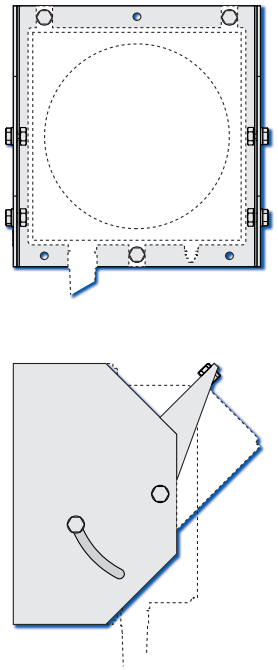

width	241 mm
depth	226 mm (at maximum inclination of repeater)
height	240 mm
weight	3.5 kg

Connection Box, Type 4894-AD

Dimensions and Weight

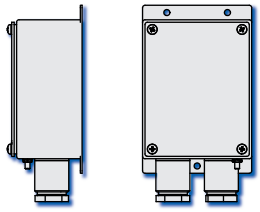	width	90 mm
	depth	60 mm
	height	164 mm
	weight	0.8 kg

Azimuth Device PV23, Type 2535

Dimensions and Weight

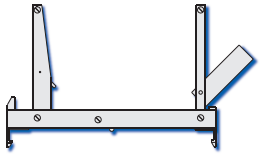	width	62 mm
	depth	230 mm
	height above repeater top glass	135 mm
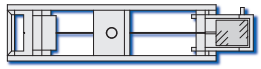	weight	0.6 kg

Telescopic Alidade, Stock no. 60280

Dimensions and Weight

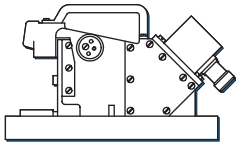	width	236 mm
	height	150 mm
	weight	3.1 kg

1.7 Declaration of Conformity

Marine Equipment Directive EC Declaration of Conformity:

Northrop Grumman Sperry Marine B.V.
Woltmanstrasse 19
D-20097 Hamburg, Germany

as manufacturer hereby declares that the following specified equipment:

“Analogue Compass Repeaters types 5016-CA, -CB, -CC, -CD”

comply with the Marine Equipment Directive 96/98/EC, as amended.

This equipment has been tested to verify compliance with the Regulations and Testing Standards as per EC Type Examination (B) and EC Quality System (D) issued by:

Notified Body No. 0098 Germanischer Lloyd.

Note

The current issue of the detailed Marine Equipment Directive EC Declaration of Conformity of Northrop Grumman Sperry Marine B.V. Hamburg is part of the client CD stock no. 56 800.
For further details please contact:
Northrop Grumman Sperry Marine B.V. Hamburg
Regulatory Support Group

Chapter 2: Operation

2.1 Readout Elements, Indicators and Controls

Figure 2-1:
Readout elements, indicators and controls

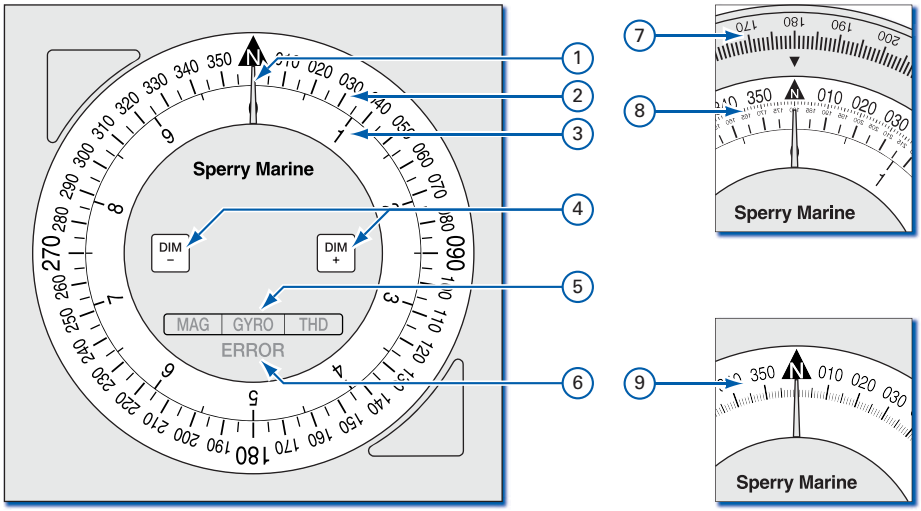

① **Lubber Line**
Indicates the "ahead" direction. Ship's heading is read off the compass card(s) at the lubber line.

②, ⑨ **360° Card**
Indicates ship's heading on a 360° (1x) scale. Numbered at 10°, graduated every 5° (every 1° in magnetic repeater, type 5016-CC).

③ **10° Card**
Indicates the "fine" portion of the heading on a 10° (36x) scale. Numbered every 1°, graduated every 0.5°. Magnetic repeater, type 5016-CC possesses no 10° card.

④ **DIM- / DIM+ keys**
Adjust the illumination brightness.
Keep both keys pressed for more than 3 s, then release to initiate synchronization; keep both keys pressed for more than 10 s, then release to initiate self test.

⑤ **Source Indicators**
- **GYRO** = indicating true heading from gyrocompass,
- **MAG** = indicating magnetic compass heading (raw or corrected),
- **THD** = indicating true heading from transmitting heading device.

⑥ **Error indicator**
Indicates error conditions visually through blink codes.

⑦ **Bearing Repeater Verge Ring Scale**
Used for taking relative bearings with the azimuth device PV 23. Bearings read off at the index mark at the "near" side of PV 23.

⑧ **Bearing Repeater Azimuth Scale**
Used for taking absolute bearings with the azimuth device PV 23. Bearings read off via the mirror prism at the "near" side of PV 23.

2.2 Powering up the Repeaters

The analogue compass repeaters are not equipped with power switches. The devices power up as soon as supply power is applied.

2.3 Data Protocol and Source Detection

When it is first connected to the gyrocompass system, the repeater auto-detects the communication parameters by checking for a valid protocol/baudrate combination in the following order:

- NMEA 0183 at 4800 Bd.
- NMEA 0183 at 38400 Bd.
- NMEA 0183 at 9600 Bd.
- NMEA 0183 at 19200 Bd.
- Plath binary format (9600 Bd.)

Once the repeater has recognized valid data, it stores the communication parameters and will re-activate them at subsequent power-ups to become quickly operative. Should no data be recognized using the stored communication parameters, the repeater executes the auto-detection routine again.

Note

The communication protocol and baudrate may be hard-set in the repeater configuration. This will disable auto-detection.

Within a standard Sperry Marine NAVIGAT gyrocompass system, the analogue repeater will receive the heading source selection status from the compass system.
If the NMEA 0183 protocol is used, the repeater evaluates the proprietary $PPLAN or $PPNSD sentences. If the PLATH protocol is used, the heading data itself contains a source indicator.

In systems where the NMEA 0183 protocol is used but no $PPLAN or $PPNSD sentences are received, the repeater determines the active source by searching the incoming data for valid heading sentences in the following order of priority:

- $HETHS (source = GYRO)
- any $--THS, except $GPTHS (source = GYRO)
- $HEHDT (source = GYRO)
- any $--HDT, except $GPHDT or $HCHDT (source = GYRO)
- $GPTHS (source = THD)
- $GPHDT (source = THD)
- $HCHDT (source = MAG)
- $HCHDM (source = MAG)
- $HCHDG (source = MAG)

Note

The range of recognized sentences for each source may be restricted by hard-setting the accepted sentences in the repeater configuration.

Should the currently active heading source get lost, a timeout condition will occur, the compass card may freeze and the repeater will search the incoming data for other valid heading sentences in order of priority.

Only if no valid heading sentences are received at all, the repeater will raise an error. The error indicator will flash synchronously with one or all source indicators to indicate that no active heading data are currently received. The error indication will last until the valid heading data are again received. For more details see “Error Indication” on page 3-1.

2.4 Reading off Heading and Source Indication

WARNING

Risk of using invalid heading data
The heading indication at the repeater is only valid if the error indicator is off and exactly one of the source indicators is permanently lit.
In case the error indicator in on and one or all of the source indicators are flashing the heading indication of the repeater must be considered as invalid and the heading data must not be used for steering the vessel.

Read the vessel’s heading off the 360° and 10° cards at the lubber line.

The type of heading source in use (gyrocompass = GYRO, magnetic compass = MAG or transmitting heading device = THD) is indicated through the corresponding indicator being lit.
As an example, a repeater indicating a gyrocompass heading of 123.4° is shown below.

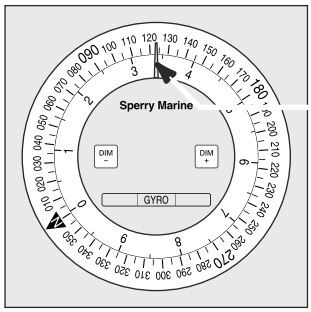

For details regarding indication of invalid heading data see ‘Error Indication” on page 3-1.

2.5 Adjusting the Illumination Brightness

To adjust the backlight and keypad illumination brightness:

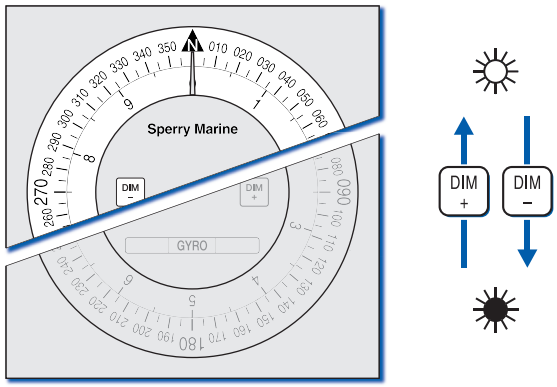

Press **DIM+** to increase the illumination brightness.

Press **DIM-** to reduce the illumination brightness.

Note

Reducing the illumination brightness also reduces the brightness of the source and error indicator LEDs.

2.6 Synchronizing the Compass Cards

The analogue repeaters are self-synchronizing. They do not normally require any user intervention to re-synchronize the compass card indication with the actual heading received.
However, the position offset counter may occasionally get out of synchronization with the actual position of the cards, e.g. due to excessive gear friction at low temperatures or when a repeater is subjected to heavy shocks during transport.

To initiate compass card synchronization:

1. Press and hold **DIM**- and **DIM+** simultaneously for more than 3 seconds, then release the keys.
2. The compass cards start turning to align to the North (zero degree) position. When the photo interrupters detect that both cards have finally aligned, they briefly stop and the position offset is zeroed.

The synchronization is now complete and the repeater automatically resumes normal operation.

2.7 Initiating the Self Test

To quickly test the proper function of the card drive and the LED indicators, a self test mode is provided.

To initiate the self test:

1. Press and hold **DIM**- and **DIM+** simultaneously for more than 10 seconds. As soon as the active source indicator goes off, release the keys.
2. The repeater first executes the synchronization routine.
3. Next, all indicators and the backlight come on at maximum brightness for 2 seconds, then go to minimum brightness for 2 seconds and back to maximum brightness for another 2 seconds.
4. Lastly, the cards turn counterclockwise towards the South position, stop briefly and then turn clockwise through a full circle until reaching the South position again.

The self test is now complete and the repeater automatically resumes normal operation.

2.8 Bearing Repeater Capacitive Keys

Although the bearing repeater type 5016-CA is equipped with capacitive keys, in contrast to the push buttons of the compass repeaters types 5016-CB, -CC and -CD, there is no difference in functionality or handling neither with adjusting the illumination brightness, synchronizing the compass cards, nor with initiating the self test.

2.9 Taking Bearings with the Azimuth Device PV 23

WARNING

Risk of injury
Permanent eye damage may result, when looking directly at the sun or at its reflection in the black azimuth mirror when using the azimuth device PV 23.
The PV 23 is not suited for taking the azimuth of the sun itself, as the coloured shades do not sufficiently block out direct sunlight.
Never look directly at the sun or at its reflection in the black azimuth mirror when using the azimuth device PV 23.
Always engage one or both of the coloured anti-glare filters if necessary to reduce glare while observing an object

CAUTION

Risk of damage
The prismatic azimuth device PV 23 is not designed to constantly stay on the bearing repeater compass.
Leaving the azimuth device PV 23 on the bearing repeater after usage, will cause wear and damage to the equipment.
Always remove the azimuth device PV 23 from the bearing repeater and store it carefully in its storage box.

1. Mount the azimuth device PV 23 onto the bearing repeater:
   a) Holding the PV 23 slightly tilted to the far side, hook the far side catch under the rim of the repeater's verge ring.
   b) Let the centering pin at the underside of the PV 23 engage into the recess of the repeater faceplate.
   c) Push down on the near side of the PV 23.
   The flexible near side catch snaps into place and the PV 23 is free to rotate around the centering pin.
2. Take bearings:
   a) Peep through the near sight while rotating the PV 23 towards the object to observe.
   b) If necessary, engage one or both of the coloured shades to reduce glare while observing the object.
   c) Continue to rotate the PV 23 until both sights are aligned with the observed object.

   If the object's elevation is too high for direct observation, pick up the object's reflection in the black azimuth mirror and align the sights with the reflection.

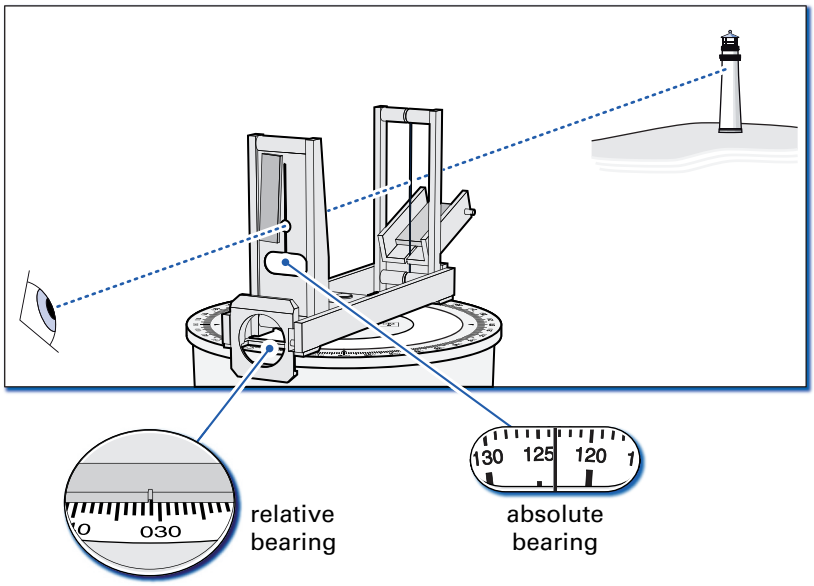

3. Read bearings:
   a) Read the object's absolute bearing off the azimuth scale through the prism below the near sight.
   b) Read the object's relative bearing off the verge ring scale at the index mark on the PV 23.

Note

Have in mind that, being read from the near side, the azimuth and verge ring scales run from right to left.

Chapter 3: Error Indication

When a repeater compass detects an error, the red error indicator flashes or lights up permanently depending on error condition.

The error indication remains active until the cause of the error is eliminated or no longer persists.

Note

The repeater compasses do not possess an audible alarm indicator.

3.1 Error Blink Codes

When an error is detected, the error condition at hand is indicated by the error indicator showing a corresponding blink code.

Table 3-1: Repeater compass error blink codes

error condition/ blink code	corrective action
no activity at data input *or* power-up failure *permanently on*	Check whether data are present at source's output. Check connection between source and repeater. Check whether the repeater reacts to key presses (dimming, synchronization). If keys are not functional, the repeater did not enter normal operational mode. Cycle power. If the error persists, send the repeater back to Sperry Marine for exchange.
heading timeout *on / off for equal periods*	Check whether source provides valid heading data. In NAVIGAT compass systems, check that heading data originates from selected source according to $PPLAN/$PPNSD sentence. Check source's protocol and baudrate settings. Check whether repeater configuration is hard-set to different parameters than source's output. In case one or all source indicators are flashing together with the error indicator see "Heading Timeout with flashing Source Indicator" on page 3-2 for additional information and corrective action. If the error persists, send the repeater back to Sperry Marine for exchange.
synchronization fault *two short flashes followed by a pause*	Initiate synchronization of the compass cards. Cycle power. If the error persists after several attempts to synchronize, return the repeater to Sperry Marine for exchange.

Heading Timeout with flashing Source Indicator

In case of a heading timeout, one or all of the source indicators may flash in synchronously with the error indicator. This provides additional information regarding the cause of the timeout.

- If one of the source indicator flashes, no heading data is received from the currently active source. Possible causes:
  - The active source selection is read from the proprietary $PPLAN or $PPNSD sentences but no valid heading is received from the selected source.
  - The active source has marked its heading data invalid or has stopped sending data and no valid heading data is received from another source.
- If all source indicators flash simultaneously, valid datagrams are recognized at the input but the currently active source cannot be determined. Possible causes:
  - NMEA sentences are received but these do not contain any of the recognized heading sentences.
  - NMEA heading sentences are recognized but are excluded from the range of accepted sentences in the repeater's configuration.

Chapter 4: Preventive Maintenance

4.1 Maintenance by Shipboard Personnel

CAUTION

Risk of damage through wrong cleaning agent
The front plates of the compass repeaters are sensitive against aggressive cleaning agents as organic solvents or acetone.
Do not clean the front plate with organic solvents, acetone or any other aggressive cleaning agent.
Use only water and soap or a mild detergent to clean the front plate.

The analogue compass repeaters are maintenance-free. All internal moving parts, such as the stepper motor, gear train and bearings, are lifetime-lubricated. The gimbals of the bearing stand and bearing consoles are fitted with self-lubricating polymer bushings.

Shipboard personnel is only requested to keep the compass repeaters clean and to regularly check all cables and connectors visually for any signs of damage or deterioration.

All compass repeater front plates should regularly become cleaned using water and soap or a mild detergent only.

Maintenance of externally installed Bearing Repeater

CAUTION

Risk of damage though solar radiation
The bearing repeater 5016-CA is equipped with a cover plate for protection against solar radiation.
It is recommended to always protect the bearing repeater with the cover plate when not in use.

CAUTION

Risk of damage
The cover plate, protecting the bearing repeater 5016-CA against solar radiation, must never be touched with tools to avoid any damage.
Always install and remove the cover plate with bare hands only.

CAUTION

Risk of unnecessary wear
The bearing repeater 5016-CA can optionally be equipped with a watertight plastic cover for protection against environmental conditions.
It is recommended to always protect the bearing repeater with the plastic cover when not in use.

Of course, depending on whether the compass repeater is installed externally or internally, the cleaning effort may vary and will be increased with exposition to environmental conditions, e.g. when installed on the fly bridge or top desk.

Especially the bearing repeater installed on a bearing stand is permanently exposed to environmental conditions and does therefore need additional protection for long time usage and for reduction of unnecessary wear.

It is therefore recommended to always protect the bearing repeater with the cover plate against solar radiation when not in use.

Additionally, the usage of the watertight plastic cover for protection against all environmental conditions is also recommended when the bearing repeater is not in use.

Chapter 5: Installation

5.1 Bearing Repeater

Installing Bearing Repeater with Bearing Stand

CAUTION

Risk of wrong installation
Wrong positioning of the bearing stand will obstruct to take bearings. Always make sure that the bearing stand is so positioned that the vessel's superstructure does not unduly obstruct the view of the horizon. In case one bearing stand does not allow to take bearings in a full circle of 360°, a second bearing stand must be installed for compensation.

CAUTION

Risk of damage
The bearing repeater is a heavy instrument.
To avoid any damage during installation of the bearing repeater into the gimbal ring, the installation should be carried out by two service persons.

Bearing repeater stands may be positioned amidships (on the fore-and-aft line) or at the port or starboard sides of the vessel. The position of the bearing stand(s) is to be chosen that the vessel's superstructure does not unduly obstruct the view of the horizon when bearings are taken. In case one bearing stand does not allow take bearings in a full circle of 360°, a second bearing stand must be installed for compensation.

The bearing stand, type 4622, is to be attached to the deck or a pedestal using four M 20 fasteners. Tubular spacers are provided, which are to be inserted between the mounting surface and the base of the stand. The four attachment points are to be located on an imaginary circle of 370 mm diameter, at the 0°, 90°, 180° and 270° positions relative to the forward direction. The elongated holes in the base of the bearing stand allow to correct a misalignment of ±3.5° max.

A cable feedthrough is to be located centrally beneath the stand, so that the connection cable from the compass system runs up the inside of the stand column.

Note

The installation of the repeater in the gimbal ring should be carried out by two service persons.

To install the bearing stand and bearing repeater:

1. Check that the mounting facilities and the cable feedthrough provided by the shipyard match with the specifications given in dimension drawing 4622-0112-03 respectively 4622-0112-06.
2. Lay the connecting cable. Make sure that enough cable exits from the feedthrough to run it up the stand column and through the grommet to the connection box.

3. If the mounting surface is furnished with tapped holes, place the tubular spacers over the holes. If welded studs are provided, slide the spacers onto the studs.
4. Place the bearing stand on top of the spacers. The stand may be mounted in any of the four possible orientations. Make sure, however, that the connection box is easily accessible.
5. Loosely attach the bearing stand to the mounting surface with the fasteners provided by the shipyard. Use washers. Do not yet tighten the fasteners.
6. Remove the grommet from the cable exit in the stand column.
7. Run the connection cable up the stand column and through the exit to the outside of the stand.
8. Loosen one of the lock nuts securing the trunnions in the gimbal ring and screw back the trunnion by approximately 2 cm.
9. Hold the repeater in a convenient position close to the bearing stand. Unwind the repeater connection cable and run it through the gimbal ring, the stand column and the cable exit to the outside of the stand.
10. Lift the bearing repeater into the gimbal ring so that the lubber line points in the forward direction.
11. Locate the fixed trunnion in the bushing in the repeater.
12. Turn the loosened trunnion clockwise into the opposite bushing, so that the repeater is secured without play in the gimbal ring.
    Make sure that the repeater swings freely in the gimbal ring without jamming.
13. Check that the repeater is centered in the gimbal ring. If necessary, adjust the trunnions to center the repeater.
14. Carefully tighten the trunnion lock nuts until they are just free of clearance.
15. Align the bearing stand with the vessel's fore-and-aft line as follows:
    a) Determine the exact lateral distance between the stand's centre and the vessel's fore-and-aft line.
    b) Position a beam with a perpendicular reference mark well forward of the bearing stand, at the same lateral distance from the fore-and-aft line.
    c) Fit a PV 23 azimuth device to the bearing repeater.
    d) Take a bearing of the reference mark on the beam.
    The bearing is to be 360° exactly. If necessary, gently rotate the bearing stand until a bearing of 360° is obtained.
    e) Position a second beam well aft of the bearing stand.
    f) Take a bearing of the reference mark on the beam.
    Check that the bearing is 180° exactly. If necessary, correct any misalignment by rotating the bearing stand, then re-check the bearings of the two beams.

Note

In case the bearing stand is mounted amidships (on the fore-and-aft line), no beams need to be erected if bearings can be taken of objects on the fore-and-aft line, e.g. the centre of the foremast, flagstaff etc.

16. Tighten the fasteners on the repeater stand base.

17. Punch or cut a hole for the connection cables into the grommet, slide the grommet onto the cables and press it into the cable exit.
18. Remove the cover plate from the connection box.
19. Remove the cable jacket from the ends of the connection cables, draw back the cable screens and insert the cables into the connection box through the cable glands.
20. Firmly tighten the cable glands. Make sure to establish a solid connection between the screens and ship's ground via the glands.
21. Connect the repeater and shipside wires to the terminal blocks as per the wiring diagrams and connection drawings provided.
22. In case a custom configuration is required, configure the repeater now using the SUSI application (see chapter 6, 'Configuration").
23. Attach the cover plate to the connection box, power up the compass system and carry out a full functional test of the repeater.

Installing Bearing Repeater with Bearing Bracket

CAUTION

Risk of wrong installation
Wrong positioning of the bearing stand will obstruct to take bearings. Always make sure that the bearing stand is so positioned that the vessel's superstructure does not unduly obstruct the view of the horizon. In case one bearing stand does not allow to take bearings in a full circle of 360°, a second bearing stand must be installed for compensation.

CAUTION

Risk of damage
The bearing repeater is a heavy instrument.
To avoid any damage during installation of the bearing repeater into the gimbal ring, the installation should be carried out by two service persons.

The bearing repeater bracket, type 4890, is typically fitted to a bulwark or other vertical surface parallel or perpendicular to the vessel's fore-and-aft line. The position of the bearing bracket(s) is to be chosen that the vessel's superstructure does not unduly obstruct the view of the horizon when bearings are taken. In case one bearing bracket does not allow take bearings in a full circle of 360°, a second bearing bracket must be installed for compensation.

The shipyard is to provide the mounting surface with four M 10 bolts or welded studs, to which the bracket is then attached with nuts and washers. The mounting surface should be as exactly parallel or perpendicular to the fore-and-aft line as possible, as the mounting method permits to correct only a small amount of misalignment.

Note

The installation of the repeater in the gimbal ring should be carried out by two service persons.

To install the bearing repeater bracket and repeater:

1. Check that the mounting facilities provided by the shipyard match with the specifications given in dimension drawing 4890-0112-03.
2. Check that easy access is provided to the connection box at the right hand side of the bracket. If necessary, unmount the box and fit it to the bracket's left hand side or directly onto the bulwark.
3. Screw a thin M 10 nut onto each of the four mounting studs. Leave a few threads exposed between the nuts and the mounting surface to allow for fine-adjustment of the nuts' positions later
4. Put a flat washer onto each nut.
5. Fasten the bearing repeater bracket to the attachment studs with four thin nuts and washers. Tighten the nuts only lightly.
6. Loosen one of the lock nuts securing the trunnions in the gimbal ring and screw back the trunnion by approximately 2 cm.
7. Hold the repeater in a convenient position close to the bracket. Unwind the repeater connection cable and run it through the gimbal ring from above.
8. Lift the bearing repeater into the gimbal ring so that the lubber line points in the forward direction.

9. Locate the fixed trunnion in the bushing in the repeater.
10. Turn the loosened trunnion clockwise into the opposite bushing, so that the repeater is secured without play in the gimbal ring.
    Make sure that the repeater swings freely in the gimbal ring without jamming.
11. Check that the repeater is centered in the gimbal ring. If necessary, adjust the trunnions to center the repeater.
12. Carefully tighten the trunnion lock nuts until they are just free of clearance.
13. Align the bearing repeater bracket with the vessel's fore-and-aft line as follows:
    a) Determine the exact lateral distance between the bracket's centre and the vessel's fore-and-aft line.
    b) Position a beam with a perpendicular reference mark well forward of the bearing stand, at the same lateral distance from the fore-and-aft line.
    c) Fit a PV 23 azimuth device to the bearing repeater.
    d) Take a bearing of the reference mark on the beam.
    The bearing is to be 360° exactly. If necessary, fine-adjust the positions of the flat nuts on the attachment studs until a bearing of 360° is obtained.
    e) Position a second beam well aft of the bearing stand.
    f) Take a bearing of the reference mark on the beam.
    Check that the bearing is 180° exactly. If necessary, correct any misalignment by readjusting the flat nuts, then re-check the bearings of the two beams.

Note

In case the bearing repeater bracket is mounted amidships (on the fore-and-aft line), no beams need to be erected if bearings can be taken of objects on the fore-and-aft line instead, e.g. the centre of the foremast, flagstaff etc.

14. Thoroughly tighten the flat nuts on the attachment studs.
15. Remove the cover plate from the connection box.
16. Shorten the repeater and shipside connection cables as required.
17. Remove the cable jacket from the ends of the connection cables, draw back the cable screens and insert the cables into the connection box through the cable glands.
18. Firmly tighten the cable glands. Make sure to establish a solid connection between the screens and ship's ground via the glands.
19. Connect the repeater and shipside wires to the terminal blocks as per the wiring diagrams and connection drawings provided.
20. In case a custom configuration is required, configure the repeater now using the SUSI application (see chapter 6, 'Configuration").
21. Attach the cover plate to the connection box, power up the compass system and carry out a full functional test of the repeater.

Installing Bearing Repeater with Adjustable Bearing Bracket

CAUTION

Risk of wrong installation
Wrong positioning of the bearing stand will obstruct to take bearings. Always make sure that the bearing stand is so positioned that the vessel's superstructure does not unduly obstruct the view of the horizon. In case one bearing stand does not allow to take bearings in a full circle of 360°, a second bearing stand must be installed for compensation.

CAUTION

Risk of damage
The bearing repeater is a heavy instrument.
To avoid any damage during installation of the bearing repeater into the gimbal ring, the installation should be carried out by two service persons.

The adjustable bearing repeater bracket 4905 is typically fitted to a bulwark or other vertical surface parallel or perpendicular to the vessel's fore-and-aft line. The position of the adjustable bearing bracket(s) is to be chosen that the vessel's superstructure does not unduly obstruct the view of the horizon when bearings are taken. In case one bearing bracket does not allow take bearings in a full circle of 360°, a second adjustable bearing bracket must be installed for compensation.

The shipyard is to provide the mounting surface with four M 10 bolts or welded studs, to which the bracket is then attached with nuts and spherical washers with conical seats. The mounting surface should be as exactly parallel or perpendicular to the fore-and-aft line as possible. The mounting method permits to correct a misalignment of ±3.0° max.

Note

The installation of the repeater in the gimbal ring should be carried out by two service persons.

To install the adjustable bearing bracket and bearing repeater:

1. Check that the mounting facilities provided by the shipyard match with the specifications given in dimension drawing 4905-0112-03.
2. Screw a thin M 10 nut onto each of the four mounting studs. Leave a few threads exposed between the nuts and the mounting surface to allow for fine-adjustment of the nuts' positions later.
3. Put a spherical washers with conical seat onto each of the nuts.
4. Fasten the adjustable bearing repeater bracket to the attachment studs with four thin nuts and spherical washers with conical seats. Tighten the nuts only lightly.
5. Loosen one of the lock nuts securing the trunnions in the gimbal ring and screw back the trunnion by approximately 2 cm.
6. Hold the repeater in a convenient position close to the bracket. Unwind the repeater connection cable and run it through the gimbal ring from above.
7. Lift the bearing repeater into the gimbal ring so that the lubber line points in the forward direction.
8. Locate the fixed trunnion in the bushing in the repeater.

9. Turn the loosened trunnion clockwise into the opposite bushing, so that the repeater is secured without play in the gimbal ring.
   Make sure that the repeater swings freely in the gimbal ring without jamming.
10. Check that the repeater is centered in the gimbal ring. If necessary, adjust the trunnions to center the repeater.
11. Carefully tighten the trunnion lock nuts until they are just free of clearance.
12. Align the bearing repeater bracket with the vessel's fore-and-aft line as follows:
    a) Determine the exact lateral distance between the bracket's centre and the vessel's fore-and-aft line.
    b) Position a beam with a perpendicular reference mark well forward of the bearing stand, at the same lateral distance from the fore-and-aft line.
    c) Fit a PV 23 azimuth device to the bearing repeater.
    d) Take a bearing of the reference mark on the beam.
       The bearing is to be 360° exactly. If necessary, adjust the positions of the flat nuts on the attachment studs until a bearing of 360° is obtained.
    e) Position a second beam well aft of the bearing stand.
    f) Take a bearing of the reference mark on the beam.
       Check that the bearing is 180° exactly. If necessary, correct any misalignment by readjusting the flat nuts, then re-check the bearings of the two beams.

Note

In case the bearing repeater bracket is mounted amidships (on the fore-and-aft line), no beams need to be erected if bearings can be taken of objects on the fore-and-aft line instead, e.g. the centre of the foremast, flagstaff etc.

13. Thoroughly tighten the flat nuts on the attachment studs.
14. Remove the cover plate from the connection box.
15. Shorten the repeater and shipside connection cables as required.
16. Remove the cable jacket from the ends of the connection cables, draw back the cable screens and insert the cables into the connection box through the cable glands.
17. Firmly tighten the cable glands. Make sure to establish a solid connection between the screens and ship's ground via the glands.
18. Connect the repeater and shipside wires to the terminal blocks as per the wiring diagrams and connection drawings provided.
19. In case a custom configuration is required, configure the repeater now using the SUSI application (see chapter 6, 'Configuration").
20. Attach the cover plate to the connection box, power up the compass system and carry out a full functional test of the repeater.

5.2 Steering Repeater / Magnetic Heading Repeater

CAUTION

Risk of damage
The compass repeaters are heavy instruments. The compass repeater cables are not designed for holding the repeater just with the cable. Never hold or transport the repeater on the cable alone when installing or wearing a compass repeater.

The steering repeater, type 5016-CB, and the magnetic heading repeater, type 5016-CC; are supplied with four attachment columns and mounting clamps for installation in a standard Sperry Marine console frame or directly into a console cutout.
In case of direct console mounting, the shipyard is to cut a square opening into the console as per dimension drawing 5016-0112-02.

To install the repeater in a console frame:

1. Loosen the four screws on the attachment columns and rotate the mounting clamps inward.
2. Connect the repeater cable to the shipside terminals as per the wiring diagrams and connection drawings provided.
3. Install a ground strap between the ground tab at the back of the repeater housing and ship's ground.
4. In case a custom configuration is required, configure the repeater now using the SUSI application (see chapter 6, 'Configuration").
5. Insert the repeater into the frame.
6. Rotate the mounting clamps outward and fasten them with the retaining screws.
7. Power up the compass system and carry out a full functional test of the repeater.

To install the repeater directly in a console cutout:

1. Remove the four screws, clamps and washers from the attachment columns. This exposes four M 4 studs on the back of the repeater's front plate.
2. Fit a clamp and washer onto each of the studs, rotate it inward and lightly fasten it with an attachment column.
3. If watertight installation is required, fit the provided rubber seal to the back of the repeater.
4. Connect the repeater cable to the shipside terminals as per the wiring diagrams and connection drawings provided.
5. Install a ground strap between the ground tab at the back of the repeater housing and ship's ground.
6. In case a custom configuration is required, configure the repeater now using the SUSI application (see chapter 6, 'Configuration").
7. Insert the repeater in the console cutout.
8. Rotate the mounting clamps outward and thoroughly fasten them with the attachment columns.
9. Power up the compass system and carry out a full functional test of the repeater.

5.3 Bulkhead Repeater

CAUTION

Risk of damage
The compass repeaters are heavy instruments. The compass repeater cables are not designed for holding the repeater just with the cable. Never hold or transport the repeater on the cable alone when installing or wearing a compass repeater.

CAUTION

Risk of malfunction
Do not lengthen the cable between the bulkhead repeater and the connection box as the USB service port will not work reliably.
If the connection box cannot be installed at an accessible location close to the repeater, it will be required to unmount and disassemble the repeater to gain access to the internal USB receptacle when configuring or servicing the device.
If the repeater cable is connected directly to shipside terminals, the external USB port may not be used and its four wires must be connected to blind terminals.

The bulkhead repeater, type 5016-CD, is attached directly onto a bulkhead or is fitted to the optional swivelling mounting bracket. For this purpose, the bulkhead repeater housing possesses three attachment feet with 7 mm holes.

In case of direct bulkhead mounting, the shipyard is to provide the mounting surface with three M 6 weld studs or tapped holes, to which the repeater is attached. In case the optional swivelling bracket is used, the shipyard is to provide the mounting surface with four M 8 weld studs or tapped holes, to which the bracket is attached.

The bulkhead repeater's electrical connection is normally made via the connection box 4894-AD. As the box contains the service USB port, it should be installed at an easily accessible location close to the repeater.

To install the bulkhead repeater:

1. If the repeater is to be mounted directly onto a bulkhead:
   a) Check that the mounting facilities provided by the shipyard match with the specifications given in dimension drawing 5016-0112-03
   b) Fasten the repeater to the bulkhead with suitable fasteners (shipyard supply).

   If the swivelling bracket is used:
   c) Check that the mounting facilities provided by the shipyard match with the specifications given in dimension drawing 5016-0112-04
   d) Fasten the bracket or the to the bulkhead with suitable fasteners (shipyard supply).
   e) Fasten the repeater to the bracket with the fasteners provided.
2. Install a ground strap between the ground stud at the bottom of the repeater housing and ship's ground.

3. Install the connection box at an easily accessible location close to the repeater.
4. Remove the cover plate from the box.
5. Shorten the repeater and shipside connection cables as required.
6. Remove the cable jacket from the ends of the connection cables, draw back the cable screens and insert the cables into the connection box through the cable glands.
7. Firmly tighten the cable glands. Make sure to establish a solid connection between the screens and ship's ground via the glands.
8. Connect the repeater and shipside wires to the terminal blocks as per the wiring diagrams and connection drawings provided.
9. In case a custom configuration is required, configure the repeater now using the SUSI application (see chapter 6, 'Configuration").
10. Attach the cover plate to the connection box, power up the compass system and carry out a full functional test of the repeater.

Chapter 6: Configuration

6.1 Using the Default Configuration

The repeater's factory default configuration will be suitable for most installations and will normally not require any customization.

By default, the repeater configuration is "all-automatic", permitting auto-detection of the input protocol and baudrate as well as the active heading source.
The automatic source detection takes place as described in chapter 2, section 2.3, "Data Protocol and Source Detection".

The magnetic heading repeater is configured by default to display magnetic heading only, regardless of which source is currently active.

6.2 Configuring the Analogue Repeater with SUSI

Note

This section is intended for authorized service personnel configuring or servicing an analogue repeater. These tasks require a PC running the Sperry Universal Service Instrument (SUSI) application. SUSI is provided to authorized service personnel only and is generally not available to end-customers.

Should it be required to configure the repeater using other settings than the factory defaults, the configuration settings must be accessed from a PC (field engineer's laptop or notebook computer) connected to the repeater's USB service port and running the Sperry Universal Service Instrument application (SUSI).

For the present section, it is assumed that you have successfully installed SUSI and the USB device driver for the analogue repeaters on your PC. Once an analogue repeater is connected to the PC, a device named "RCS - NGSM Service USB Port" (repeater compass system) must appear in the Windows Device Manager, listed as a modem device.

If you have not yet installed the SUSI and/or the device driver, refer to the SUSI Installation Guide, included in the Sperry Marine Client-CD 056800. Support for the analogue repeater is available in SUSI versions 1.024 and higher. If you are using an earlier version, obtain the current SUSI installation package from Sperry Marine and re-install the software.

The procedures described below are performed using the controls appearing in SUSI's application tab when connecting to the repeater. More advanced configuration features, accessible through SUSI's terminal and parameter tabs, are beyond the scope of this manual.

If configuring a repeater using other settings than the factory defaults, note all settings in the analogue compass repeater setup table (see Appendix). Send a copy of the filled-out table to Sperry Marine for inclusion in the ship's file.

To configure the analogue repeater:

1. If the repeater is currently powered up, switch off the power first.
2. Gain access to the repeaters USB service port receptacle:
   - In case of a steering or magnetic heading repeater, remove the plastic plug from the back of the housing to access the receptacle on the repeater PCB. If necessary, unmount the repeater from the console to make sure that the port is freely accessible for plugging and unplugging the USB cable.
   - In case of a bearing or bulkhead repeater, remove the cover plate from the connection box to access the receptacle inside the box.

   Do not plug in the USB cable yet.
3. Power up the repeater.
4. At the PC, start up the SUSI application.

   A login dialogue pops up:

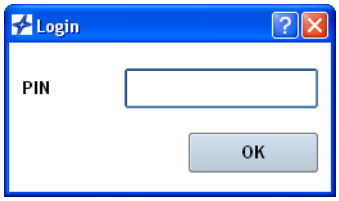

5. Enter PIN "**20097**".
   This will start up SUSI in the service mode.

   Click OK or the enter key to continue.
6. SUSI's main window now opens, with the "Application" tab displaying a list of supported devices:

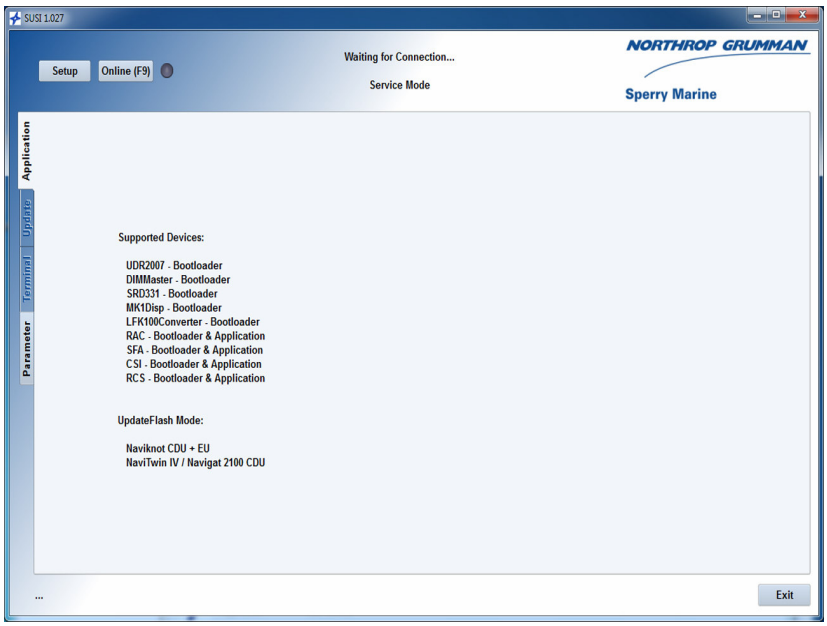

7. The "Online" button at the top left of SUSI's main window will be greyed out, as SUSI has not yet detected a device to connect to. The status line at the top center of the window will read "Waiting for Connection...".

8. Plug in the USB cable at the PC and at the repeater's service port. The "Online" button should now become clickable (not greyed-out), indicating that SUSI has found a device to connect to:

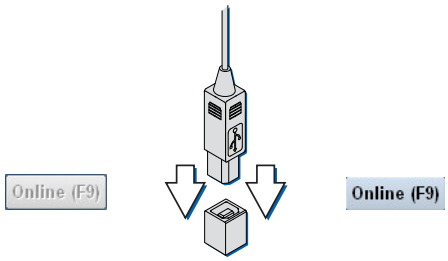

The LED icon next to the button will remain grey, as no connection has been made yet.

9. Click Online (F9) to connect to the analogue repeater.
The LED icon should now change to green and the status line should read "Connected with RCS".

Upon connection, SUSI populates the Application tab with the analogue repeater application controls and displays the application's "Main Page":

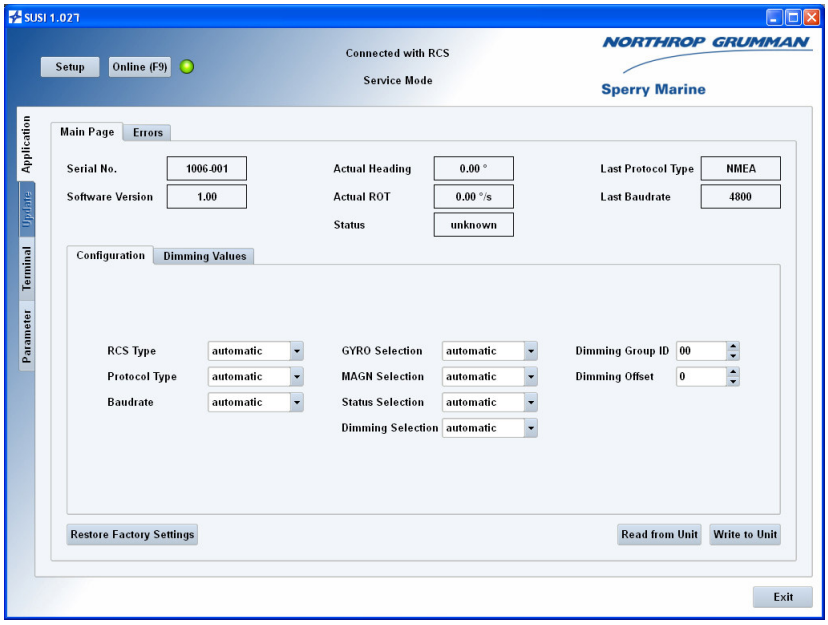

10. If the service PC has not previously been used to service an analogue repeater, a warning message will pop up, indicating that the parameter list for the device is empty:

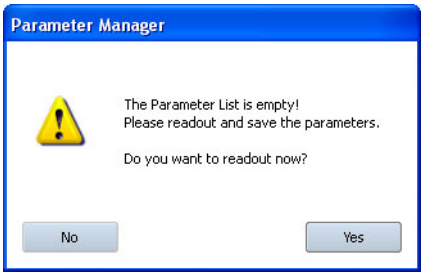

Click Yes to read the current configuration from the repeater and to set the Main page parameter controls accordingly, or click No if you intend to set all parameters manually in SUSI first and write them to the repeater later.

11. If you clicked Yes in the previous step, a dialogue box will pop up, asking whether the parameters should be saved as default settings for this device:

Click Yes. to save the parameters as default settings or No to cancel.

12. If you clicked Yes in the previous step, the default settings are now written to a file named “RCSdefault.xml“ in the sub-directory “Parameter Files” in SUSI’s installation directory.

Note

If a default parameter file for the analogue repeater already exists, e. g. if the PC has been used previously to service a repeater, the above warning message will not appear.
In this case, do not write back settings to the repeater before all parameters have been set as required for the repeater under service.

13. Using the Main Page controls, set the repeater configuration parameters and dimming values as required. An overview and detailed descriptions of the parameters are given below (see “Configuration Parameters” on page 6-6 and “Dimming Values” on page 6-12).

14. When all parameters are set as required, click Write to Unit to transfer the settings to the repeater.

15. To finish off the configuration, click Read from Unit in the SUSI application to read all configuration and calibration settings from the analogue repeater back into SUSI's runtime memory.
    A dialogue box will pop up, asking whether these parameters should be saved as default settings for this device:

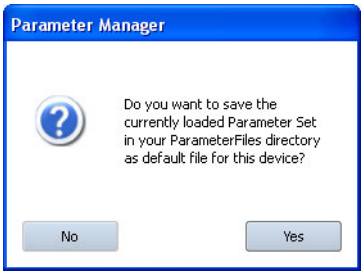

16. Click Yes to save the parameters. The saved file is named "RCSdefault.xml" and is located in the sub-directory "Parameter Files" in SUSI's installation directory.
    To be able to retrieve and restore the configuration at a later point in time, this file should be copied and saved to an appropriate location.

Note

If a file "RCSdefault.xml" already exists in SUSI's "Parameter Files" sub-directory, it will be overwritten without further warning.
To be able to retrieve and restore the configuration at a later point in time, rename the file "RCSdefault.xml" and/or copy it from the "Parameter Files" sub-directory to a different location.

17. Fill out the analogue repeater setup table to retain an easily retrievable written record of the analogue repeater configuration.
18. Unplug the USB cable from the repeater and the service PC.
19. Power down the repeater and put the protective plug back on the housing or reattach the cover to the connection box, respectively.
20. The configuration of the analogue repeater is now complete.

6.3 Configuration Parameters

The analogue repeater application main page contains the settable controls to configure the repeater as required for the installation at hand.

Figure 6-1: Controls on the repeater application main page

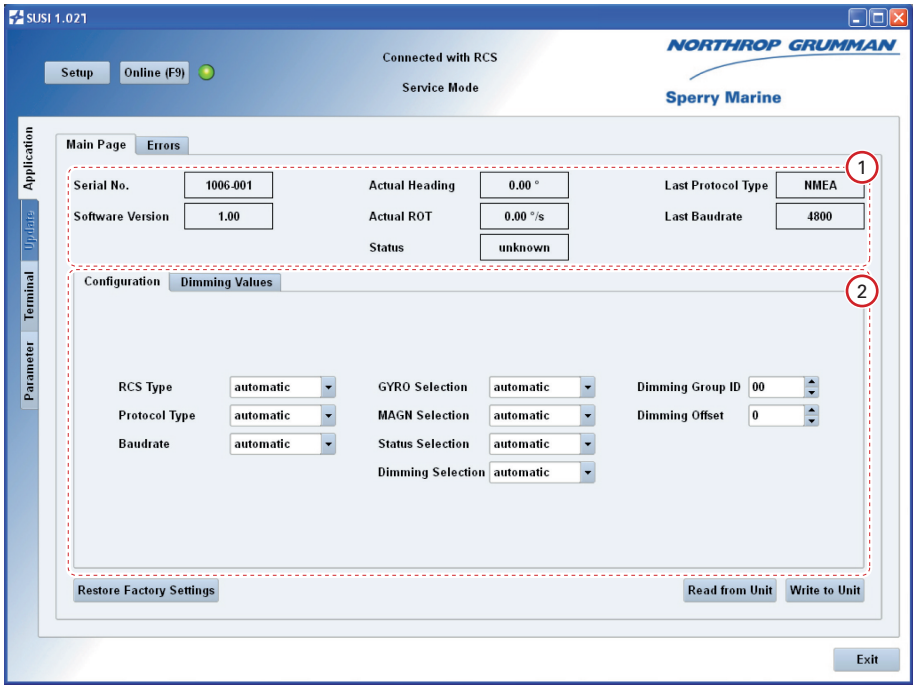

1 **Read-Only Controls:**

→ Repeater Serial No. and Software Version, Actual Heading, Rate of Turn and Selection Status, Last Active Protocol Type and Baudrate

2 **Configuration Parameter Controls:**

- **RCS Type**
  - **automatic** [1]
  - **Magnetic** [2]
  - **Gyro**
- **Protocol Type**
  - **automatic** [1]
  - **NMEA**
  - **PLATH**
- **Baudrate**
  - **automatic** [1]
  - **4800**
  - **9600**
  - **19200**
  - **38400**
- **GYRO Selection**
  - **automatic** [1]
  - **HETHS**
  - **xxTHS**
  - **HEHDT**
  - **xxHDT**
  - **GPTHS**
  - **GPHDT**
- **MAGN Selection**
  - **automatic** [1]
  - **HCHDT**
  - **HCHDM**
  - **HCHDG**
- **Status Selection**
  - **automatic** [1]
  - **PPLAN**
  - **PPNSD**
- **Dimming Selection**
  - **automatic** [1]
  - **xxDDC**
  - **PPLAI**
- **Dimming Group ID**
  - ID: **00 – 99** [default = 00]
- Dimming Offset
  - offset: **-7 – +7** [default = 0]

1 = default setting
2 = default for magnetic heading repeater

RCS Type

Sets the repeater device type.

Settings: **automatic**
Recognize heading data from gyrocompasses, THDs and magnetic compasses. This is the factory default setting.

If data is received in the NMEA 0183/IEC 6116 protocol, the repeater determines the active heading source according to the following scheme:

Check the incoming data for $PPLAN or $PPNSD sentences according to the “Status Selection” setting.

- If valid $PPLAN or $PPNSD sentences are found, check the incoming data for heading from the selected source (gyro or magnetic), according to the “GYRO Selection” and “MAGN Selection” settings.
  - If valid heading data is received from the selected source, indicate heading and source.
  - If no valid heading data is received from the selected source, raise an error.
- If no valid $PPLAN or $PPNSD sentences are found, check the incoming data for heading from any source (gyro or magnetic), according to the “GYRO Selection” and “MAGN Selection” settings.
  - If valid heading data is received from one source only, indicate the heading and source.
  - If valid heading data is received from more than one source, indicate the heading and source from the highest prioritized source:
    – Gyrocompass,
    – THD,
    – Magnetic Compass.
  - If no valid heading data is received from any source, raise an error.

Magnetic
Recognize magnetic heading data only. This is the required setting for the magnetic heading repeater, type 5016-CC. When installing a magnetic heading repeater, updating its software or exchanging its PCB, make sure that this setting is selected.

Gyro
Recognize heading data from gyrocompasses or THDs only. This setting disables automatic fallback to magnetic heading when gyro heading is lost.

Protocol Type

Selects the data protocol type.

Settings: **automatic**
Auto-detect the input protocol type, NMEA 0183/IEC 61162 or Plath binary.

NMEA
Recognize the NMEA 0183/IEC 61162 protocol only.

Plath
Recognize the Plath binary protocol only.

Baudrate

Selects the input baudrate (effective for the NMEA 0183/IEC 61162 protocol only).

Settings: **automatic**
Auto-detect the input baudrate.

4800
Receive at 4800 Bd. only.

9600
Receive at 9600 Bd. only.

19200
Receive at 19200 Bd. only.

38400
Receive at 38400 Bd. only.

Gyro Selection

Selects the accepted NMEA 0183/IEC 61162 sentences for gyrocompass and THD headings.

Settings: **automatic**
No restriction. Accept, in the following order of priority:
- $HETHS,
- $--THS with any other talker ID (except HC),
- $HEHDT,
- $--HDT with any other talker ID (except HC).

If the talker ID is “GP”, the source is treated as a THD, in all other cases, the source is treated as a gyrocompass.

HETHS
Accept $HETHS only.

xxTHS
Accept $--THS with any other talker ID (except HC).

HEHDT
Accept $HEHDT only.

xxHDT
Accept $--HDT with any other talker ID (except HC).

GPTHS
Accept $GPTHS only. The source is treated as a THD.

GPHDT
Accept $GPHDT only. The source is treated as a THD.

Magnetic Selection

Selects the accepted NMEA 0183/IEC 61162 sentences for magnetic compass heading.

Settings: **automatic**
No restriction. Accept, in the following order of priority:
- $HCHDT
- $HCHDM
- $HCHDG

HCHDT
Accept $HCHDT only.

HCHDM
Accept $HCHDM only.

HCHDM
Accept $HCHDG only.

Status Selection

Selects the accepted NMEA 0183/IEC 61162 sentences for heading source selection.
This setting is only effective in Sperry NAVIGAT gyrocompass systems, which generate the respective proprietary “nav. status” sentences.

Settings: **automatic**
No restriction. Accept, in the following order of priority:
- $PPLAN
- $PPNSD

PPLAN
Accept $PPLAN only.

PPNSD
Accept $PPNSD only.

Dimming Selection

Selects the accepted NMEA 0183/IEC 61162 sentences for serial dimming of the illumination brightness.

Settings: **automatic**
No restriction. Accept, in the following order of priority:
- $PPLAI (proprietary)
- $--DDC (standard)

PPLAI
Accept the proprietary $PPLAI sentence only.

xxDDC
Accept $--DDC with any talker ID.

Dimming Group ID

Assigns the repeater to a dim group.
This setting is only effective when the proprietary $PPLAI sentence is used for serial dimming

Setting: **00 – 99**
Select an ID between “01” and “99” to assign the repeater to the respective dim group.
Selecting ID “00” lets the repeater accept any dim command received, regardless of group assignment.

Dimming Offset

Sets a local offset for the brightness level.

Setting: **-7 – +7**
Select an offset as required to match the brightness of the repeater to that of other equipment controlled through the same dimming command device.

Offsets below 0 decrease, offsets above 0 increase the repeater's overall brightness by the corresponding number of brightness levels.

As the analogue repeater's illumination has eight discrete brightness levels, an offset of -7 forces the minimum level while an offset of 7 forces the maximum level at all times.

Note that adjusting the brightness with the **DIM**- and **DIM+** keys also alters the dimming offset accordingly.

6.4 Dimming Values

The illumination intensities at the repeater's eight discrete brightness levels are factory preset to provide a useful range of levels under most lighting conditions, both at day and night.
However, to permit an optimum adaptation of the repeater to local lighting conditions, a configurable dimming value table is maintained in the on-board memory.

For each brightness level ("dimming step"), the table holds a set of four dimming values. These represent the illumination intensity for the card backlight ("PCB"), the source indicators ("Status"), the **DIM** keys and the error indicator.

Figure 6-2: Repeater application main page: dimming values

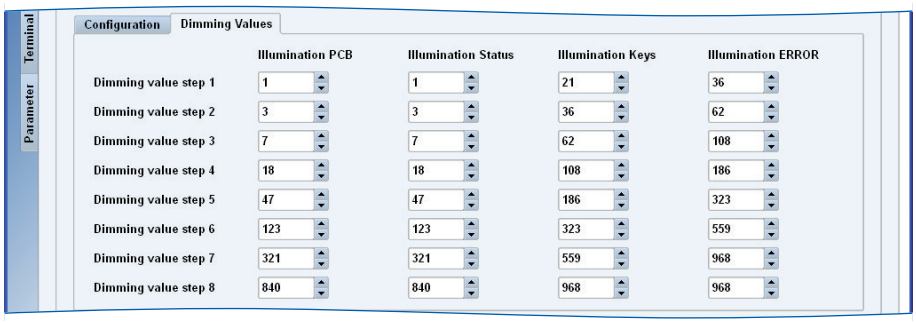

	Illumination PCB	Illumination Status	Illumination Keys	Illumination ERROR
Dimming value step 1	1	1	21	36
Dimming value step 2	3	3	36	62
Dimming value step 3	7	7	62	108
Dimming value step 4	18	18	108	186
Dimming value step 5	47	47	186	323
Dimming value step 6	123	123	323	559
Dimming value step 7	321	321	559	968
Dimming value step 8	840	840	968	968

Adjusting Dimming Values

The analogue repeater's dimming values are preset to factory defaults which should be suitable without further adjustment in most cases.

However, in certain situations, e.g. on an open deck or under subdued lighting, a more useful range of brightness levels may be obtained if the dimming values are altered.

To alter dimming values, edit the table entries directly or use the spin controls to set them to the required values.
Each table entry may take any value between 0 (off) and 1000 (maximum brightness). Due to the nonlinear brightness perception of the human eye, it will be required to gradually increase the difference in value from step to step in order to achieve even graduation of the brightness levels.

Alterations of the dimming values are transferred to the repeater immediately. This permits to directly observe the result of changes at the currently active brightness level.

Note

Do not set the error indicator's intensity to "0" at any dimming step. This would disable the indicator at the respective step.

Serial Dimming Command Evaluation

When serial dimming is used, the analogue repeater reads the commanded brightness percentage from the $--DDC or $PPLAI sentence, respectively. At a dim offset of 0, the range of possible percentage values, is mapped to the repeater's eight brightness levels as follows:

Table 6-1: Serial dimming brightness percentage to repeater brightness level mapping

commanded percentage	repeater dimming step
00 – 11	1
12 - 24	2
25 - 36	3
37 - 49	4
50 - 61	5
62 - 74	6
75 - 86	7
87 - 99	8

If the dim offset is set to a value other than 0, via the setup or by adjusting the brightness with the **DIM** keys, the effective brightness of the repeater is altered by the corresponding number of steps up or down.

Note

The analogue repeater evaluates the brightness percentage field from the $--DDC or $PPLAI sentences only. The dimming preset and colour palette fields are ignored.

Chapter 7: Troubleshooting

CAUTION

Risk of damage through unauthorized service
The housing of the bearing repeater 5016-CA is designed for increased watertightness and shall therefore not be opened in the field.
Opening the housing in the field will diminish the watertightness and may lead to condensation forming on the inside surfaces, especially the top glass, at a later point in time.
Never open the bearing repeater housing in the field.
Always return a defective bearing repeater to Sperry Marine.

CAUTION

Risk of damage through unauthorized service
The analogue compass repeaters are complex electronic devices, which are not serviceable in the field down to the level of individual circuit components.
Defective units must be sent back to Sperry Marine for repair.

CAUTION

Risk of damage of electrostatic-discharge-sensitive components
The analogue compass repeaters contain electrostatic sensitive components. Electrostatic discharge may permanently damage components.
When servicing an analogue compass repeater, take precautions to prevent electrostatic discharge.
Avoid touching any of the electronic circuitry.

Note

The analogue compass repeaters are serviced and configured using the Sperry Universal Setup Instrument (SUSI).
This tool is provided to authorized service personnel only and is generally not available to end-customers.

The analogue compass repeaters are complex electronic devices, which are not serviceable in the field down to the level of individual circuit components. Defective units must be sent back to Sperry Marine for repair.

7.1 Basic Service Checks

Field service personnel shall only limit troubleshooting to the basic service checks given below.

All repeater types 5016-CA, -CB, -CC, -CD

- Continuity checks of wiring connections.
- Checks for short circuit or overload conditions or reversed polarity of the external supply powers.
- Software-aided troubleshooting using Sperry Marine's SUSI application, if explicitly instructed by Sperry Marine.

All repeaters, except bearing repeater, type 5016-CA

- Visual inspection of mechanical components, the PCB and wiring.
- Checks of the on-board supply voltages and I/O signals and data. The presence of voltages, signals and data is indicated by diagnostic LEDs on the PCB.

Note

Exact voltage levels must be checked with a voltmeter true RMS.
The data content on serial I/O lines must be checked with the aid of suitable analysing tools, such as PC-based protocol interpreters or terminal programs.

7.2 Viewing Error Information in SUSI

Analogue Repeater Error Page

When connected to an analogue repeater, the Sperry Universal Service Instrument application (SUSI) provides an “Errors” page which displays the current activity and confirmation state of a number of possible error conditions and counts their occurrence since the last power-up:

Figure 7-1:
SUSI errors page

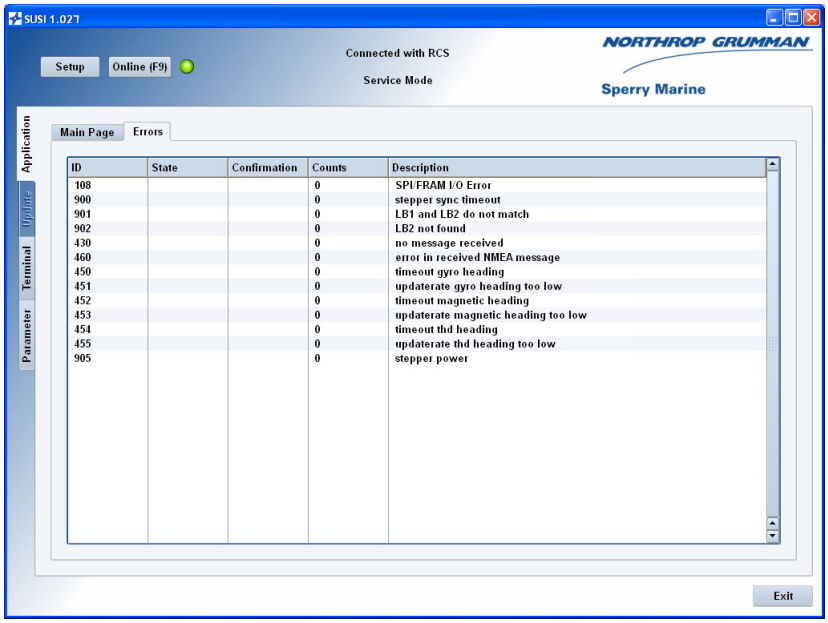

ID	State	Confirmation	Counts	Description
108			0	SPI/FRAM I/O Error
900			0	stepper sync timeout
901			0	LB1 and LB2 do not match
902			0	LB2 not found
430			0	no message received
460			0	error in received NMEA message
450			0	timeout gyro heading
451			0	updaterate gyro heading too low
452			0	timeout magnetic heading
453			0	updaterate magnetic heading too low
454			0	timeout thd heading
455			0	updaterate thd heading too low
905			0	stepper power

For errors which have not occurred since the last power-up, the state and confirmation fields will be empty and the counter will read zero. When an error condition is detected, the state field will read “active”. If the error condition is no longer present, the state changes to “inactive”. The confirmation field will always read “not acknowledged” for errors which have occurred at least once, as the analogue repeater provides no means to acknowledge an alarm.

As the Errors page is updated continuously, repeated occurrences of an error lead to a corresponding increase of the error count.

The IDs and descriptions of the error conditions shown on SUSI’s “Errors” page are given in table 7-1 below.

For more information on the SUSI application, refer to chapter 6 (“Configuration”) and to the SUSI Installation Guide included in the Sperry Marine Client-CD 056800.

Error IDs and Descriptions

Table 7-1: Analogue repeater error IDs

ID	description text	cause	corrective action
group 100: general errors			
108	"SPI/FRAM I/O Error"	unable to read/ write configuration settings	Cycle power. Re-enter configuration parameters via SUSI. If error persists, send return repeater to Sperry Marine for exchange.
group 400: data I/O errors			
430	"no message received"	no data at input	Check that valid data is present at the input.
450	"timeout gyro heading"	gyro heading lost or invalid while gyro is active source	Check that valid gyro heading data is present.
451	"updaterate gyro heading too low"	gyro heading update rate < 1 Hz	Check gyro messages for invalid data or checksum faults. Increase update rate at source.
452	"timeout magnetic heading"	magnetic heading lost or invalid while magnetic compass is active source	Check that valid magnetic compass heading data is present.
453	"updaterate magnetic heading too low"	gyro heading update rate < 1 Hz	Check magnetic heading messages for invalid data or checksum faults. Increase update rate at source.
454	"timeout thd heading"	THD heading lost or invalid while THD is active source	Check that valid THD heading data is present.
455	"updaterate thd heading too low"	THD heading update rate < 1 Hz	Check THD messages for invalid data or checksum faults. Increase update rate at source.
460	"error in received NMEA message"	received data out of range or not well-formed	Check whether all messages contain proper data.

ID	description text	cause	corrective action
group 900: stepper motor / synchronization errors			
900	"stepper sync time-out"	synchronization failed	Re-initiate synchronization. Cycle power. If error persists after several attempts to synchronize, return repeater to Sperry Marine for exchange.
901	"LB1 and LB2 do not match"	zero position mismatch between 10° and 360° card	
902	"LB2 not found"	unable to detect 10° card zero position	
905	"stepper power"	stepper motor phase supply voltage too low	Check actual voltage from 24 VDC supply.

7.3 Location of Parts on the Analogue Repeater PCB

CAUTION

Risk of damage through unauthorized service
The analogue compass repeaters are complex electronic devices, which are not serviceable in the field down to the level of individual circuit components.
Defective units must be sent back to Sperry Marine for repair.

CAUTION

Risk of damage of electrostatic-discharge-sensitive components
The analogue compass repeaters contain electrostatic sensitive components. Electrostatic discharge may permanently damage components.
When servicing an analogue compass repeater, take precautions to prevent electrostatic discharge.
Avoid touching any of the electronic circuitry.

Figure 7-2 below shows the locations of connectors and diagnostic LED indicators on the repeater PCB.

Figure 7-2: Location of parts on the analogue repeater PCB

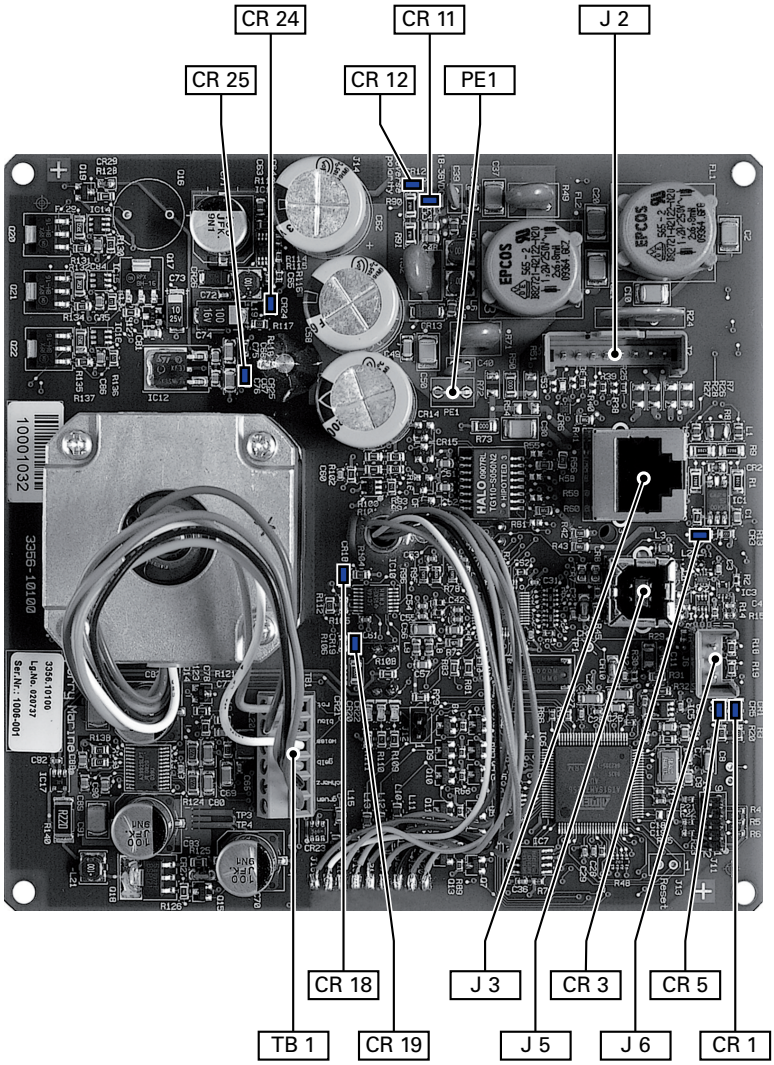

Terminal Boards and Connectors

Table 7-1: Terminal boards and connectors

	Function
TB 1	stepper motor connection terminal block
J 2	connector for repeater cable; connects to 24 VDC supply, Data input, ext. USB service interface
J 3	Ethernet connector (for future use, currently not functional)
J 5	USB service interface connector
J 6	RS-232 service interface connector (for factory use only)
PE1	connector for repeater cable shield

Diagnostic LEDs

As an aid in troubleshooting, a number of diagnostic LED indicators are provided on the PCB. These indicate general status information, the presence of supply voltages and activity at the serial data input.

Table 7-2: Diagnostic LEDs

LED	Colour	Indication	
CR 1	green	system mode/status indication: both flashing at power-up: reading setup, initializing both flashing permanently: fatal error both off: normal operational mode CR 5 on only: device in update mode	
CR 5	green		
CR 3	green	activity at data input	
CR 11	green	24 VDC supply power present	
CR 12	red	reversed polarity 24 VDC supply power	
CR 18	green	10° card at zero position	must both be on after synchronization (cards at North position)
CR 19	green	360° card at zero position	
CR 24	green	on-board +5 VDC power present	
CR 25	green	on-board +3.3 VDC power present (Vcc)	

Chapter 8: Corrective Maintenance

CAUTION

Risk of damage through unauthorized service
The analogue compass repeaters are complex electronic devices, which are not serviceable in the field down to the level of individual circuit components.
Defective units must be sent back to Sperry Marine for repair.

Note

The analogue compass repeaters are serviced and configured using the Sperry Universal Setup Instrument (SUSI).
This tool is provided to authorized service personnel only and is generally not available to end-customers.

The analogue compass repeaters are complex electronic devices, which are not serviceable in the field down to the level of individual circuit components. Defective units must be sent back to Sperry Marine for repair.

Should repeaters require to be re-configured, e.g. after installation of a new compass source, field service attendance must be requested from Sperry Marine directly or through an authorized Sperry Marine service representative.

Maintenance by field service personnel is limited to the software-based configuration and update procedures supported by the Sperry Universal Software Instrument application (SUSI).

8.1 Updating the Repeater's Firmware

The analogue compass repeater supports the uploading of firmware files using SUSI. This allows to selectively update either the actual repeater application software ("MCU-Application") or the bootloader ("MCU-Bootloader").

SUSI is able to validate the provided files beforehand, making the file upload a safe and reliable updating method. In case an upload should fail for any reason, the repeater will remain fully functional, continuing to run the previous firmware.

When new firmware is released for the analogue compass repeater, authorized field service personnel will be provided with the required files upon request.

Update Procedure

CAUTION

Risk of parameter settings loss
It cannot be guaranteed that the repeater's configuration parameter settings are left intact during a firmware update.
Before updating firmware, record all parameter settings to be able to re-enter them manually, if required.

To update an analogue compass repeater's firmware:

1. If the repeater is currently powered up, switch off the power first.
2. Gain access to the repeaters USB service port receptacle:
   - In case of a steering or magnetic heading repeater, remove the plastic plug from the back of the housing to access the receptacle on the repeater PCB. If necessary, unmount the repeater from the console to make sure that the port is freely accessible for plugging and unplugging the USB cable.
   - In case of a bearing or bulkhead repeater, open the repeater connection box to access the receptacle inside the box.
3. At the PC, start up the SUSI application.

   A login dialogue pops up:

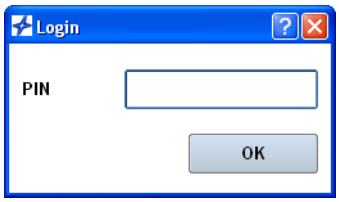

4. You may either:
   - Enter the PIN "**20097**".
     This will start up SUSI in the service mode.

     Or:
   - Leave the PIN empty.
     This will start up SUSI in the "unknown login" mode.
     In this mode, you may update the repeater firmware, but will not be able to access the repeater's configuration parameters without quitting and restarting SUSI in the service mode.

   Click OK to continue.
5. SUSI's main window now opens, with the "Application" tab displaying a list of supported devices:

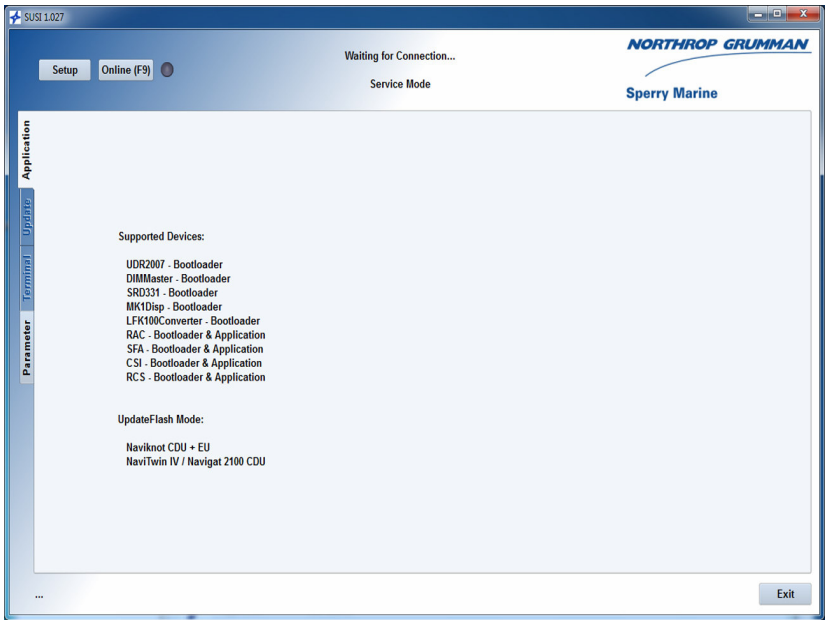

6. Plug in the USB cable at the PC and at the repeater's service port.

7. Power up the repeater.
   The "Online" button should now become clickable (not greyed-out), indicating that SUSI has found a device to connect to:

   The LED icon next to the button will remain grey, as no connection has been made yet.

8. Click Online (F9) to connect to the repeater.
   The LED icon should now change to orange and the status line should read "Connected with RCS Bootloader".

   Upon connecting, SUSI opens the update tab:

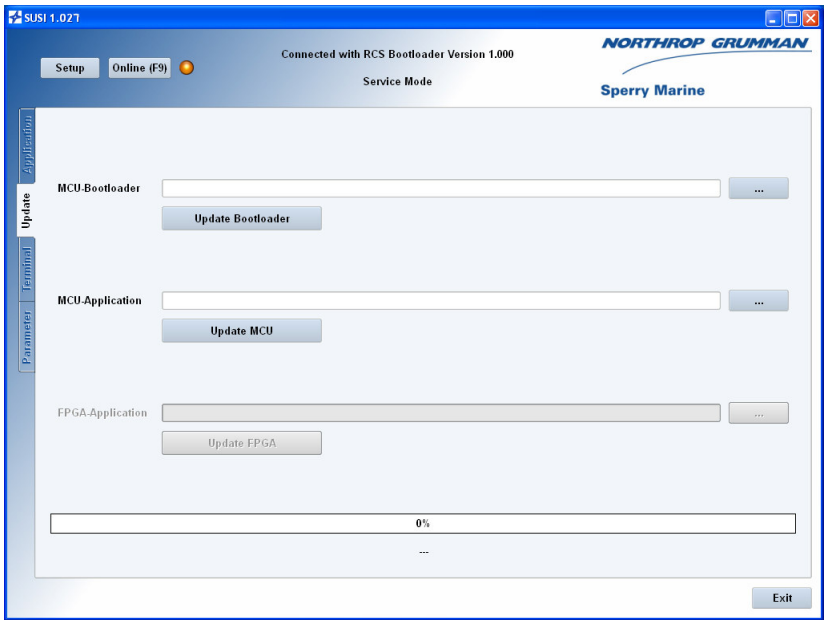

The update tab provides file browsers to select firmware update files for the repeater's system software ("MCU-Application") and the bootloader ("MCU-Bootloader").
The option to update program code for an FPGA ("FPGA-Application") is greyed out, as the repeater does not contain an FPGA.

9. Depending on whether you intend to update the repeater's MCU bootloader or its MCU application, click the respective ... button to call up the file open dialogue. Then, navigate to the firmware update file, select it in the dialogue and click Open.

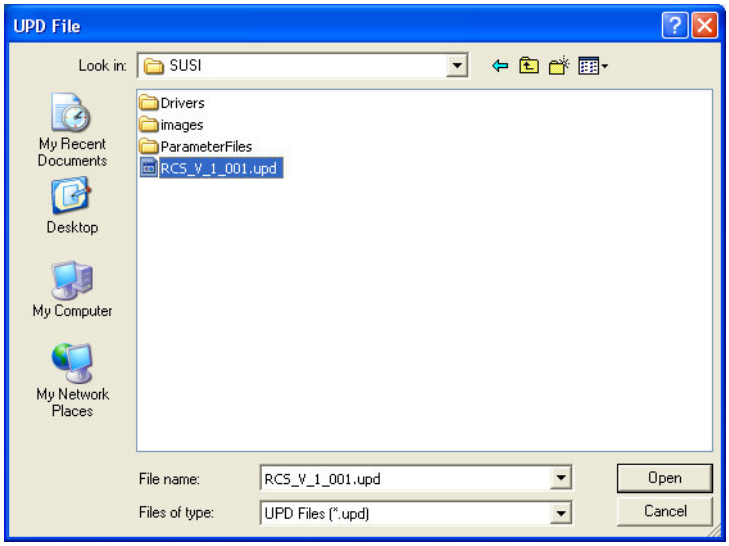

Note

The file open dialogue searches for files with the extension ".upd" only. In case the update file has been given another extension for any reason, the filename, including the complete access path, must be entered manually in the respective text box of the update tab.

10. Click Update MCU or Update Bootloader respectively to initiate the actual file upload. The bargraph at the bottom of the screen indicates the progress of the update:

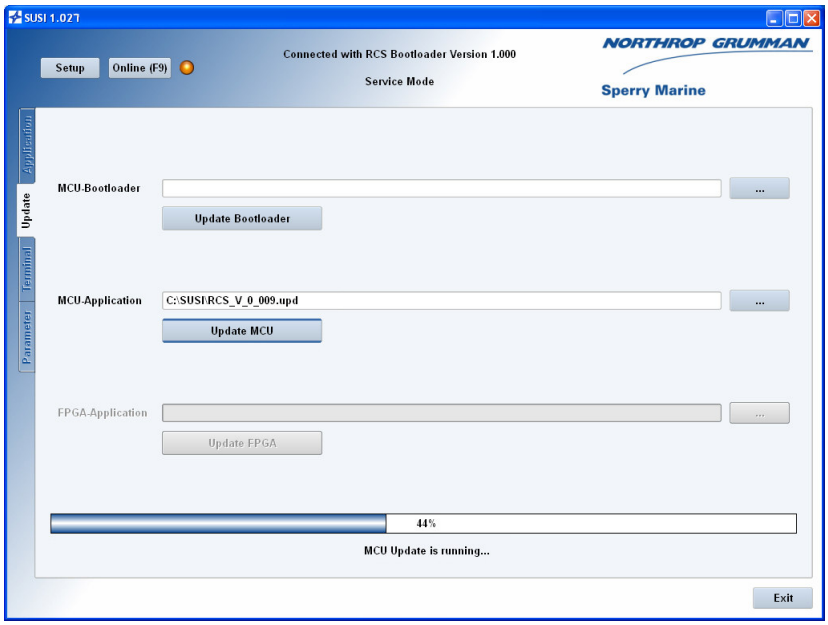

11. When the update is complete, the message “Update OK” will be shown below the progress bar.
Unplug the USB cable at the PC and at the repeater’s service port.

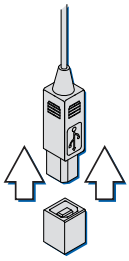

12. The repeater now reboots with the new firmware.

Abbreviations

Note

The following list contains abbreviations and shortcuts used in this manual and in displayed text of CDU menus.

A

1x1 frame	Standard frame 96x96 mm
6 step/°	scale measure setting of servomotor
A/DO-160	Section A, DO-160E, Environmental Conditions and Test Procedures for Airborne Equipment
ACK	Acknowledge alarms
ADA	Name of a Programming Language
AIS	Automatic Identification System
ANSI	American National Standards Institute
approx.	Approximately
ARS	Attitude Reference System
ASME	American Society of Mechanical Engineers
AZ	Azimuth

B

BD	Baud
Bd.	Baud
BIT	Built In Test
BIU	Bus interface unit
BSH	German Federal Maritime and Hydrographic Agency (BSH)
btl.	Bottle

C

C	Celsius
CA	Correction Angles
CAL.	Calibration
cal. no. s.	Calibration numbers
CCFL	Cold Cathode Fluorescent Lamp

CDU	Control and Display Unit
COG	Course over ground
COMP	Compass
Comp. Mon.	Compass monitor
CONST.	Constant
contd.	Continued
corr.	Correction
CORR.	Correction
cos.	Cosine
CR	Carriage return

D

D00	D00 - D32 (D-Code, = Fault code)
DAC	Digital analogue converter
DC	Direct Current
D-Code	Fault code (D00 - D32)
DGPS	Differential GPS (see also GPS)
dia.	Diameter
diff.	Difference
DIFF.	Difference
DIM	dimmer
DIN	Deutsche Industrie Norm (German Industrial Norm)
Dnn	D00 - D32 (D-Code, = Fault code)
DNV	Det Norske Veritas
DNV Naut-AW	Det Norske Veritas Class notation for enhanced nautical safety
DP	Dynamic positioning
dwg.	drawing

E

E.	East
EC	Electronic compass
EC	European Union Council

ECCN	Export Control Classification Number
ECDIS	Electronic Chart Display and Information System
e.g.	exempli gratia (for example)
EMC	Environmental conditions
EM-Log	Electromagnetic (speed) log
EN	European Norm
ERR.STAT.BITS	Validity check of fiber-optic sensor data status
ESD	electrostatic discharge
etc.	et cetera (and so on)
Ext Status In	External status input port (TB 3.11)
ext.	External
Ext. Sel.	External selector switch

F

F	Fahrenheit
fail.	Failure
FIU	Fiber optic interface unit (synonym for IPSU)
FL	Line filter
Flash	Non-volatile Memory
FMEA	Failure mode effect analysis
FOG	Fiber optic gyro
FRAM	Ferro Electrical RAM (None volatile RAM)
FU	Follow up

G

G	Gyrocompass, single gyrocompass system
G1	Gyrocompass 1
G2	Gyrocompass 2
GAS	Grounding avoidance system
Gen.	General
GG	Dual gyrocompass system
GGA	NMEA sentence providing the GPS current fix data

GGM	Dual gyrocompass/Magnetic compass system
GL	Germanischer Lloyd
GLL	Geographic position - latitude/longitude
GM	Gyro- /Magnetic compass system
G/M headings	Gyro /Magnetic compass headings
GMDSS	Global Maritime Distress and Safety System
Gnd	Ground
GNSS	Global Navigation Satellite System
GPS	Global Positioning System
GPS/AIS	Global Positioning System / Automatic Identification System
GT	Gross tonnage
GYRO	Gyrocompass

H

HCS	Heading control system
HDG	Heading, Magnetic
Hdg.	Heading
hdg.	Heading
Hdg. Diff	Heading Difference (Alarm)
Hdg. Sel	Heading selection; Selection of heading source device
HDG/G	Heading/Gyro
HDT	Heading, True
HMS	Heading management system
HSC	High speed craft
HSC-2000	Class notation for high speed craft
HTC	Heading track control
Hz	Hertz

I

I/O	Input/Output
IC	Integrated circuit
ICD	Interface Control Document

ID	Identifier
i.e.	id est (that is)
IEC	International Electro Technical Commission
IHO	International Hydrographic Office.
IMO	International Maritime Organization
IMU	Inertial Measurement Unit
INS	Integrated navigation system
INT HDG ONLY	Internal heading only
INT/EXT HDG	Internal or external heading
IP	International Protection
IPD	Illustrated Parts Data
IPL	Illustrated Parts List
IPSU	Interface and power supply unit
ISO	International Organization for Standardization

J

J	Jack (connector)

K

KF	Kalman Filter
Kt.	Knots
kt.	Knots
kts.	Knots

L

LAT	Latitude
Lat.	Latitude
lat.	Latitude
LB1	light barrier 1
LB2	light barrier 2
LCD	Liquid crystal display
LED	Light Emitting Diode

LEHMK	Lehmkuhl (transmission standard company Lehm-kuhl)
LF	Line feed
LFK	Litef Faser Kreisel (Litef fiber optic gyroscope)
lgs	longitudinal ground speed
lin.	Linear
lon.	Longitude
Lon.	Longitude
LORAN	Long Range Navigation
LORAN-C	Long Range Navigation C
LSB	Least significant Bit
lws	longitudinal water speed

M

m	Meter
M	Magnetic compass
Mag	Magnetic
MAG	Magnetic Compass
Mag Hdg. Inp.	Magnetic compass heading input
MAGN.	Magnet
Magn. Cal. Tab	Magnetic compass calibration table
Magn. DEV	Magnetic deviation
Magn. VAR	Magnetic variation
MAN.	Manually
MarED	Marine Equipment Directive
max.	Maximal
MC	Magnetic compass
MCU	Microcontroller Unit
MED	Marine Equipment Directive
MIN	Minute
min	Minute
min.	Minimal
MMS	Mechanical mode switch

Mod.	Modul
Mod.	Modus
Mod. 10/2	Gyrocompass container model 10/2
Mod. 10/3	Gyrocompass container model 10/3
Mod. 7/2	Gyrocompass container model 7/2
MSB	Most significant Bit
MSC	Maritime Safety Committee
MTBF	Mean time between failure

N

N.	North
NAUT-AW	Class notation for enhanced nautical safety
Naut-HSC	Class notation for high speed craft
Nav.	Navigation
NFU	None follow up
NG	NAVIGAT
N Gyro	North gyro
nm	Nautic mile
NM	Nautic mile
NMEA	National Marine Electronics Association
NMEA	NMEA format 4800 Bd
NMEA $--HDG	NMEA $--HDG sentence
NMEA $--HDM	NMEA $--HDM sentence
NMEA $--HDT	NMEA $--HDT sentence
NMEA Sup.FAST	SuperFAST serial data output
NMEA-GGA	NMEA-GGA sentence
NMEA-GLL	NMEA-GLL sentence
NMEA-HCHDG	NMEA-HCHDG sentence
NMEA-HCHDM	NMEA-HCHDM sentence
NMEA-HCHDT	NMEA-HCHDT sentence
NMEA-HDG	NMEA-HDG sentence

NMEA-HDM	NMEA-HDM sentence
NMEA-RMA	NMEA-RMA sentence
NMEA-RMC	NMEA-RMC sentence
n.o.	Normally open
No.	Number
NVR	None Volatile RAM

O

Off Hdg	Off heading alarm
Offs.	Offset
op.	Operational
OUTP	Output

P

p.	Pulse
Ph.	Phase
P.Gnd	Power ground
P/N	Part number
PAL	Pre-programmed IC
PCB	Printed circuit board
PLATH	Binary protocol of company C. Plath
PLCC	Plastic leaded chip carrier
POS	Position
POSITION N	No position
pwr.	Power

Q

QUICC	Quad Integrated Communications Controller
QUART	Quad Universal Asynchronous Receiver and Transmitter

R

RAC	Rudder angle calibrator
RADAR	Radio Detection and Ranging
RAI	Rudder angle indicator
RAM	Random Access Memory
RCS	(Analogue) Repeater Compass System
Ref. Voltage	Reference voltage
RM	Recommended minimum navigation information
RMA	Recommended minimum navigation information NMEA sentence A
RMA No.	Return Material Authorization number
RMB	Recommended minimum navigation information NMEA sentence B
RMC	Recommended minimum navigation information NMEA sentence C
RMS	Root mean square
ROM	Read Only Memory
ROR	Rudder order status
ROT	Rate of turn
ROTI	Rate of turn indicator
rpm	Revolutions per minute
RRR	Russian River Register
RS-422	RS-422 serial data interface standard
RSA	NMEA sentence for rudder set angle
RUD	rudder angle graph

S

S.	South
s	Second
sc.	Scaling
S/FAST M. Outp.	Superfast / fast data output of magnetic compass heading
SAT-Log	Satellite (speed) log
sc. Factor	Scale factor
SCU	Steering control unit
SEC	Second

sec	Second
SENS.D.M.OUTP.	Output sentence format for magnetic compass heading at the sensor data output
Sentence	A self-contained line of data
SFA unit	Steering failure alarm unit
S Gyro	South gyro
sin.	Sine
SMS	Steering mode switch
SOD	Serial output data
SOG	Speed over ground (actual measured speed of advance of a vessel over the surface of the earth)
SOLAS	Safety of life at sea
SoS	Scope of supply
SOU	Switch-over unit
Sp.	Speed
SPEED N	No speed
SRAM	Static RAM
SRD	Sperry doppler speed log
SRP	Sperry autopilot
Stat.	Status
stb.	Starboard
STW	Speed through water (ship's speed, as measured relative to the water).
SUSI	Sperry universal service instrument
SVDR	Simplified voyage data recorder
SW	Software

T

t.	Time
TB	TB 3.11 (external input port)
TB	Terminal block
THD	Transmitting Heading Device
thd	Transmitting Heading Device
THS	True heading and status
THS	Transmitting heading system

Temp.	Temperature
TMC	Transmitting magnet compass
TMC function	Transmitting magnet compass function
TSS1	TSS1 protocol; Heading, pitch, roll, and heave message in the commonly used TSS1 message format
TTL	Transistor-transistor-logic
tws	transversal water speed
TxD NMEA FAST	Fast serial data output

U

UART	Universal asynchronous receiver transmitter
UDR	Universal digital repeater
UML	Unified Modelling Language
USCG	United states coast guard

V

V	Volt
VAC	Volt alternating current
Val.	Values
VBW	(Velocity bottom water) Dual ground/water speed (water-referenced and ground-referenced speed data)
Vcc	Voltage at the common collector
VDC	Volt direct current
VDR	Voyage data recorder
Ver.	Version
VHW	Velocity water speed and heading / speed through water
VMS	Voyage management system
VMS/ECDIS	Voyage management system / electronic chart display and information system
VOSS	Vessel optimization & safety system
Vpp.	Voltage peak to peak
VTG	(Velocity over ground) Course over ground and ground speed (the actual course and speed relative to the ground)
VTS	Vessel traffic service

W

W	Watt
W.	West
w.	with
w/	with
W/DO-160	Section W, DO-160E, Environmental Conditions and Test Procedures for Airborne Equipment
w/o	without
ws	water speed, vector sum of lws and tws

X

X rate	Roll rate
X/Y rates	Roll and pitch rates

Y

Y rate	Pitch rate

Z

Z/DO-160	Section Z, DO-160E, Environmental Conditions and Test Procedures for Airborne Equipment

Appendix

A Setup and Configuration Tables

The following tables (blank forms) are appended to this manual:

Designation	Drawing No.
Analogue Repeater Compass Setup Table	5016-0125-02

Note

After installation of the repeater, please return a filled-out copy of the Setup Table to Sperry Marine for inclusion in the ship's file.
When permanent changes are made to the system configuration, please return an updated copy of the Setup Table to Sperry Marine.

B Drawings

The following drawings are appended to this manual:

Designation	Drawing No.
Bearing Repeater Compass, Dimension Drawing	5016-0112-08
Steering / Magnetic Repeater Compass, Dimension Drawing	5016-0112-02
Bulkhead Repeater Compass, Dimension Drawing	5016-0112-03
Bulkhead Repeater Bracket, Dimension Drawing	5016-0112-04
Watertight Installation, Dimension Drawing	5016-0112-05
Adaptor Kit for Retrofit of Type 4881, Dimension Drawing	5016-0112-07
Connection Box, Dimension Drawing	4894-0112-04
Bearing Repeater Stand, Dimension Drawing	4622-0112-03
Bearing Repeater Bracket, Dimension Drawing	4890-0112-03
Adjustable Bearing Repeater Bracket, Dimension Drawing	4905-0112-03
Azimuth Device PV 23, Dimension Drawing	2535-0112-01
Bearing Repeater Compass, Wiring Diagram	5016-0115-01
Steering / Magnetic Repeater Compass, Wiring Diagram	5016-0115-02
Bulkhead Repeater Compass, Wiring Diagram	5016-0115-03
Connection Box for Bearing and Bulkhead Repeater Compasses, Wiring Diagram	4894-0115-01
Compass System Repeater Standard Connection Diagram	4932-0553-84

Note

All appended documents and drawings are revision-controlled separately at Sperry Marine.
In case of doubt, verify the current revision status of the drawings with Sperry Marine. This manual's revision status does not change when the revision of an appended document or drawing changes.

NORTHROP GRUMMAN

Sperry Marine

Analogue Compass Repeaters Setup Table

Vessel: _____ Hull No.: _____

IMO No.: _____ Shipyard: _____

Service Station / Installer: _____ Date / Signature: _____ / _____

Installation Reference

Repeater Type:
- ◯ 5016-CA
- ◯ 5016-CB
- ◯ 5016-CC
- ◯ 5016-CD

Serial Number: _____

Location: _____

Software Version: _____

Configuration Settings

RCS Type
- ◯ automatic
- ◯ Magnetic
- ◯ Gyro

Protocol Type
- ◯ automatic
- ◯ NMEA
- ◯ Plath

Baudrate
- ◯ automatic
- ◯ 4800
- ◯ 9600
- ◯ 19200
- ◯ 38400

GYRO Selection
- ◯ automatic
- ◯ HETHS
- ◯ xxTHS
- ◯ HEHDT
- ◯ xxHDT
- ◯ GPTHS
- ◯ GPHDT

MAGN Selection
- ◯ automatic
- ◯ HCHDT
- ◯ HCHDM
- ◯ HCHDG

Status Selection
- ◯ automatic
- ◯ PPLAN
- ◯ PPNSD

Dimming Selection
- ◯ automatic
- ◯ xxDDC
- ◯ PPLAI

Dimming Group ID

ID: _____

Dimming Offset

offset: _____

Dimming Values

	Ilum. PCB	Ilum. Status	Ilum. Keys	Ilum. ERROR
Dimming Step 1				
Dimming Step 2				
Dimming Step 3				
Dimming Step 4				
Dimming Step 5				
Dimming Step 6				
Dimming Step 7				
Dimming Step 8				

Northrop Grumman Sperry Marine B.V.
Woltmanstr. 19, 20097 Hamburg, Germany
Tel.: +49-40-29900-0, Fax: +49-40-29900-146, E-mail: service.de@sperry.ngc.com

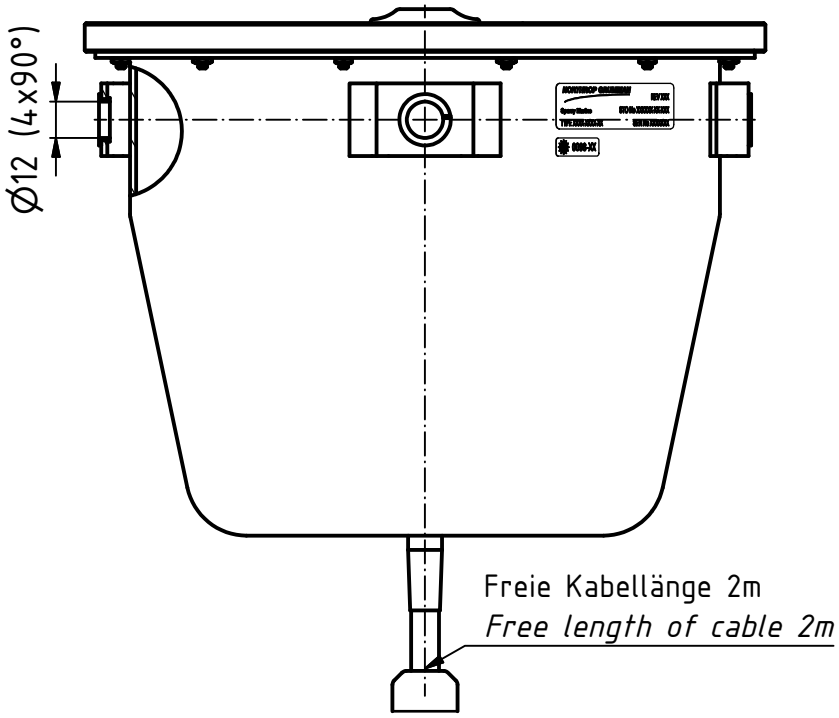

Magnetischer Schutzabstand

Mindestabstand vom:

Magnet-Regelkompass	0,80 m
Magnet-Steuerkompass	0,50 m

Reduz.Mindestabstand vom:

Magnet-Regelkompass	0,50 m
Magnet-Steuerkompass	0,30 m

Magnetic Safe Distance

Minimum Safe Distance to:

Standard Magnetic Compass	0,80 m
Steering Magnetic Compass	0,50 m

Minimum Safe Distance (reduced) to:

Standard Magnetic Compass	0,50 m
Steering Magnetic Compass	0,30 m

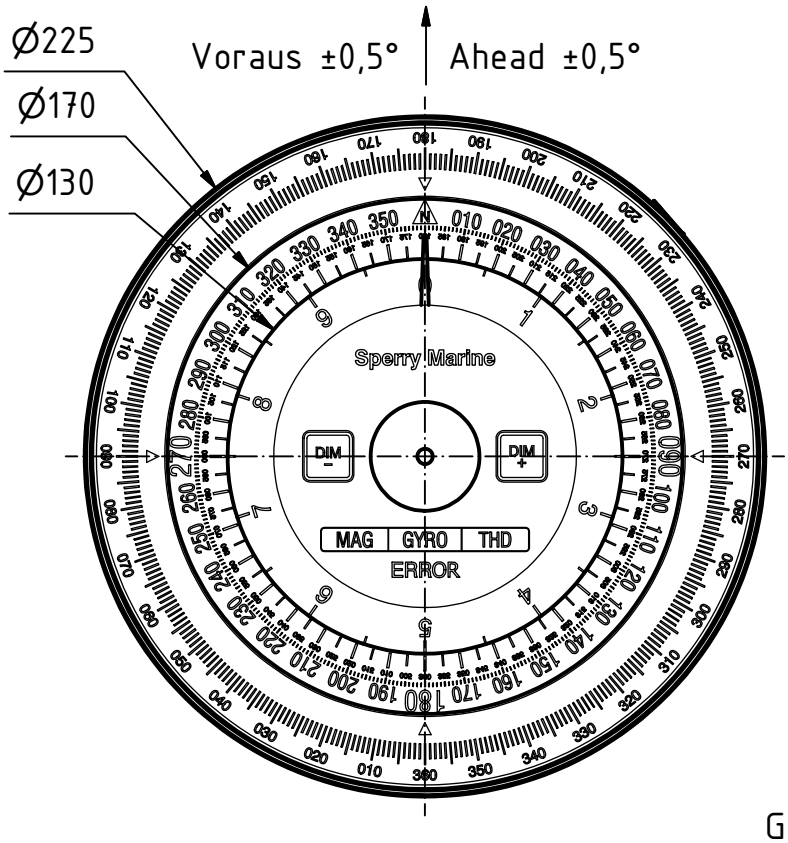

Gewicht/ *Weight*: 5,5 kg

Schutzgrad/ *Protection grade*: IP56

REV	ECO-No.	DATE	NAM
A	984159	03.02.2015	Ebe

NORTHROP GRUMMAN
Sperry Marine
HAMBURG GERMANY

	DATE	NAME
DRAWN	15.01.2015	Ebe
CHD	see ECO	
DOS		

DRAWING No.
5016-0112-08

STOCK No. 074914-0000-000

DIMENSION DRAWING

Peiltochter
Typ 5016-CA

Bearing Repeater
Type 5016-CA

FIRST ANGLE PROJECTION | DIMENSIONS IN MILLIMETERS

REPLACEMENT FOR:

SCALE 1:2,5 A4

SHEET 1

SHEETS 1

© (NORTHROP GRUMMAN SPERRY MARINE 15.01.2015)

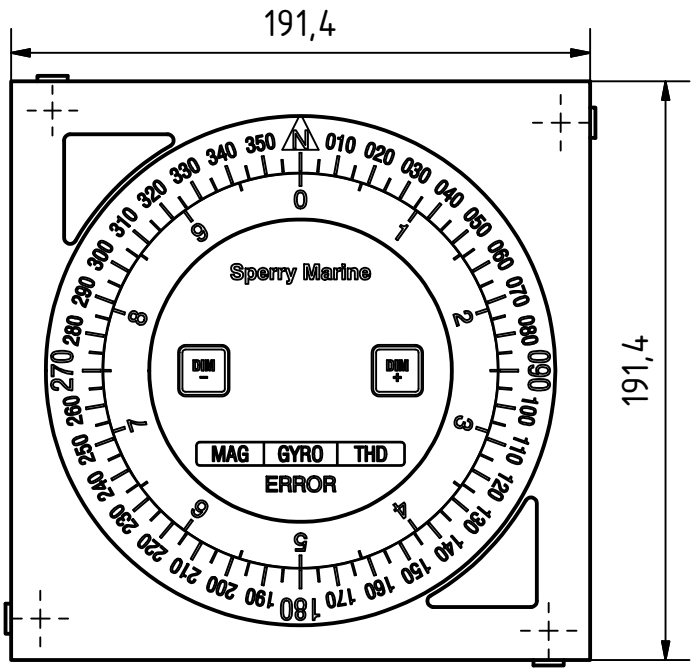

Steuertochter mit Sonnenblende
Steering repeater with sun shield
Type 5016-AA (legacy), Sto.-No. 074881
Type 5016-CB, Sto.-No. 074915

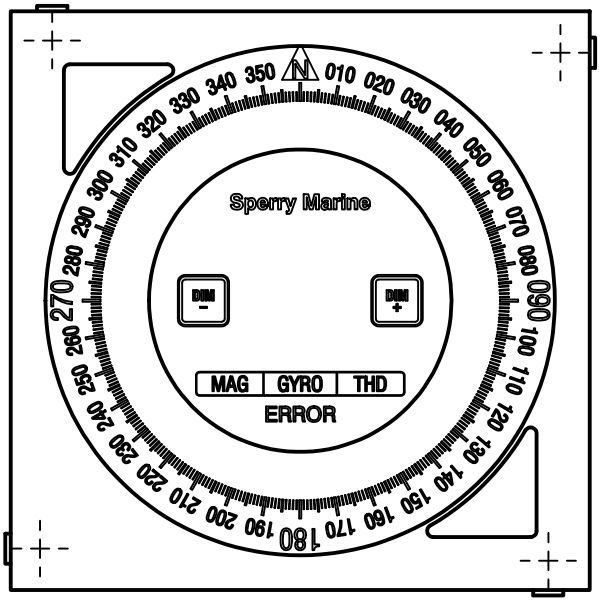

Magnettochter mit Abdeckung
Magnetic heading repeater with cover
Type 5016-AB (legacy), Sto.-No. 074882
Type 5016-CC, Sto.-No. 074916

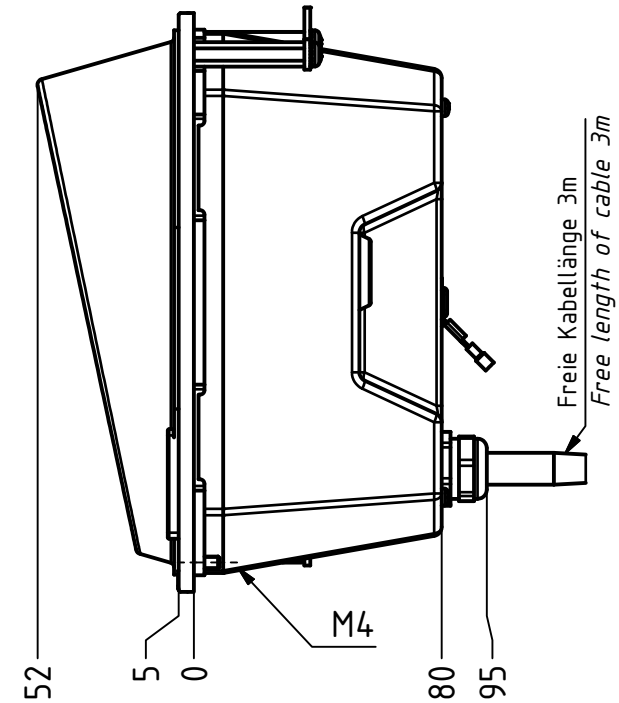

Pultausschnitt quadratisch 181,5x181,5
Square cut out for console mounting 181,5x181,5

Magnetischer Schutzabstand
Mindestabstand vom:
Magnet-Regelkompass 0,75m
Magnet-Steuerkompass 0,50m
Reduz. Mindestabstand vom:
Magnet-Regelkompass 0,45m
Magnet-Steuerkompass 0,30m

Magnetic Safe Distance
Minimum Safe Distance to:
Standard Magnetic Compass 0,75m
Steering Magnetic Compass 0,50m
Minimum Safe Distance (reduced) to:
Standard Magnetic Compass 0,45m
Steering Magnetic Compass 0,30m

Gewicht/ *Weight*: 1,25 kg

Schutzgrad/ *Protection grade*:
Front: IP56
Rückseite/ *Back*: IP23
siehe/ see 5016-0112-05

REV	ECO-No.	DATE	NAM
C	984159	03.02.2015	Ebe
B	983883	18.09.2013	Kie
A	982714	08.04.2010	Ebe

NORTHROP GRUMMAN
Sperry Marine
HAMBURG GERMANY

	DATE	NAME
DRAWN	24.11.2009	Ebe
CHD	see ECO	
DOS		

DRAWING No.
5016-0112-02
STOCK No. see above

DIMENSION DRAWING
Pulttochter
Steuertochter/ Magnettochter
Console Repeater
Steering/ Magnetic HDG repeater

FIRST ANGLE PROJECTION
DIMENSIONS IN MILLIMETERS
REPLACEMENT FOR:

SCALE 1:2,5
A4
SHEET 1
SHEETS 1

© (NORTHROP GRUMMAN SPERRY MARINE 24.11.2009)

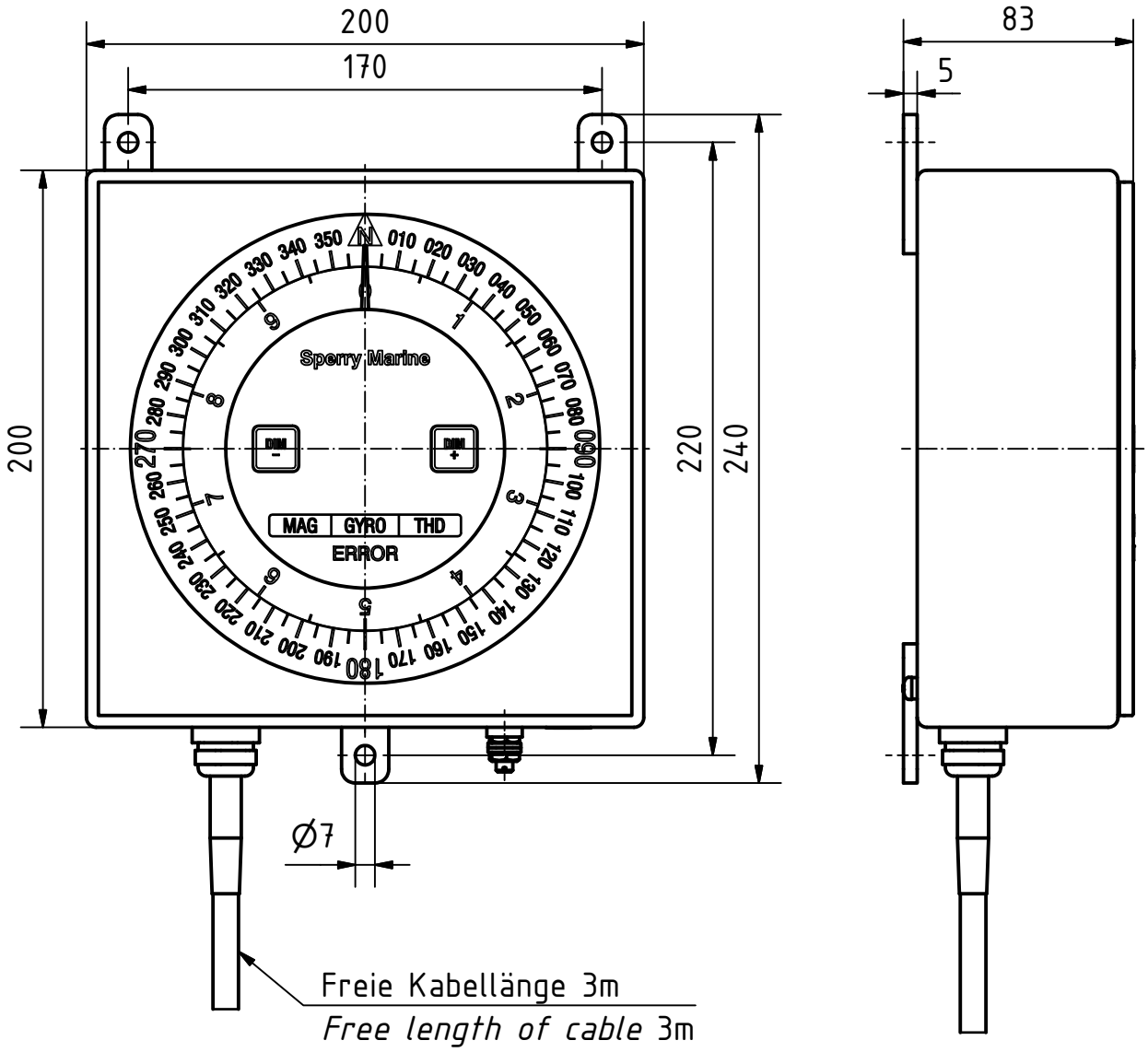

Magnetischer Schutzabstand

Mindestabstand vom:

Magnet-Regelkompass	0,70 m
Magnet-Steuerkompass	0,40 m

Reduz.Mindestabstand vom:

Magnet-Regelkompass	0,45 m
Magnet-Steuerkompass	0,30 m

Magnetic Safe Distance

Minimum Safe Distance to:

Standard Magnetic Compass	0,70 m
Steering Magnetic Compass	0,40 m

Minimum Safe Distance (reduced) to:

Standard Magnetic Compass	0,45 m
Steering Magnetic Compass	0,30 m

Type No.	Stock No.
5016-AC (legacy)	074883-0000-000
5016-CD	074917-0000-000

Gewicht/ *WEIGHT*: 2,5 kg

Schutzgrad/ *Protection grade*: IP56

REV	ECO-No.	DATE	NAM
C	984159	03.02.2015	Ebe
B	982912	11.08.2010	Ebe
A	982714	08.04.2010	Ebe

NORTHROP GRUMMAN
Sperry Marine
HAMBURG GERMANY

	DATE	NAME
DRAWN	25.11.2009	Ebe
CHD	see ECO	
DOS		

DRAWING No. 5016-0112-03

STOCK No. see above

DIMENSION DRAWING

Wandtochter
(RS 422)

Bulkhead Repeater
(RS 422)

FIRST ANGLE PROJECTION

DIMENSIONS IN MILLIMETERS

REPLACEMENT FOR:

SCALE 1:2,5 A4

SHEET 1

SHEETS 1

© (NORTHROP GRUMMAN SPERRY MARINE 25.11.2009)

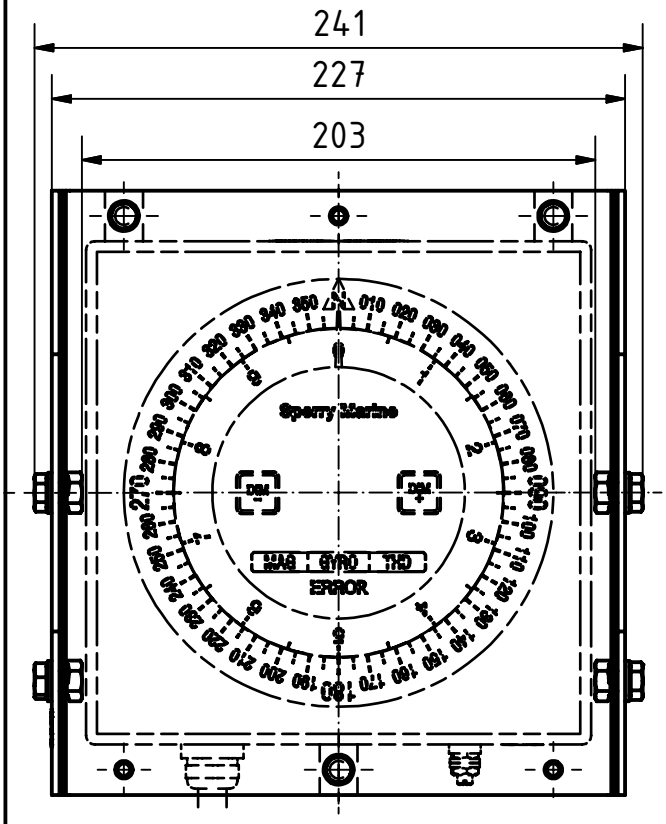

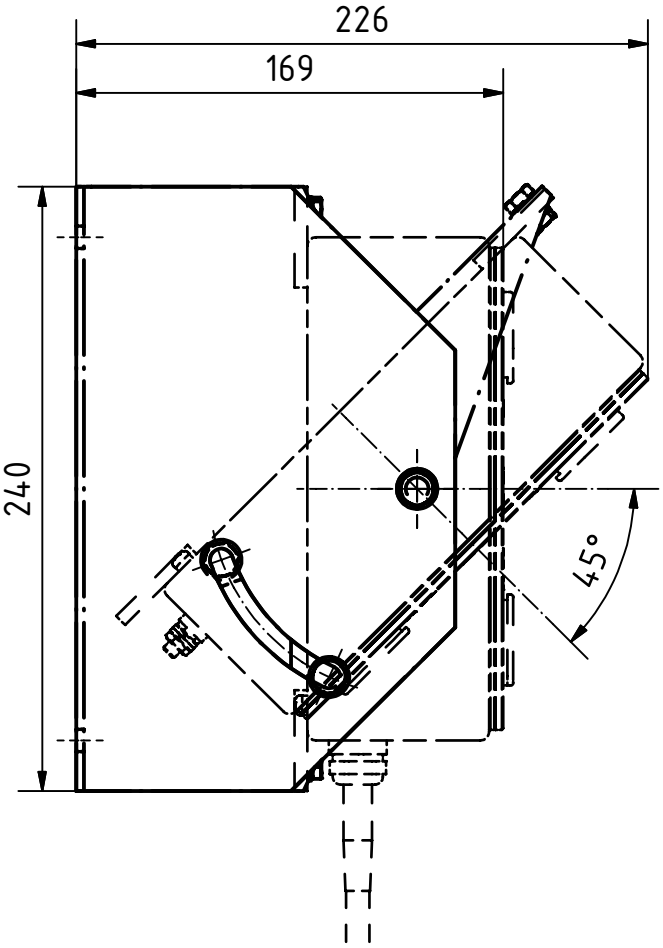

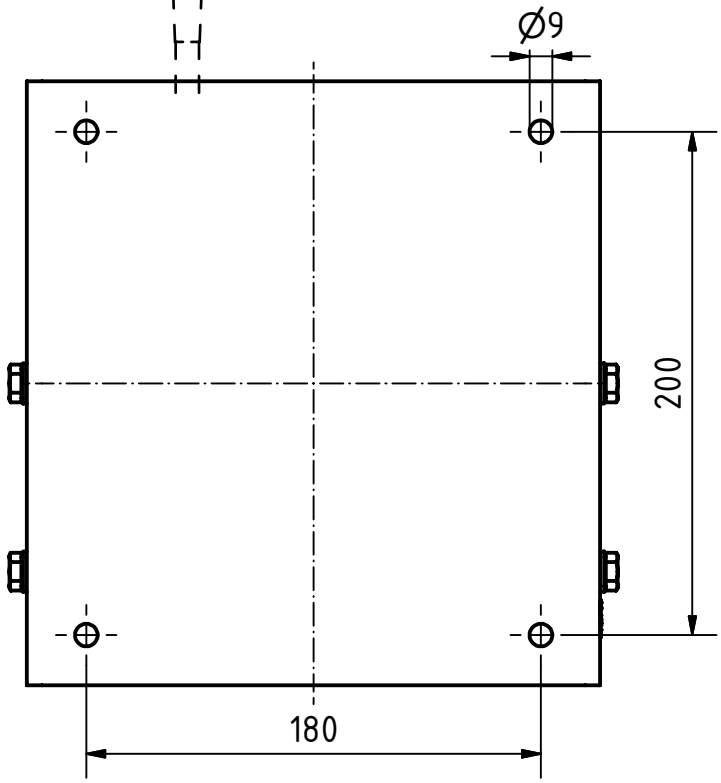

Gewicht/ *Weight*: 3,5 kg

01	-	13.03.2010	Ebe
REV	ECO-No.	DATE	NAM

NORTHROP GRUMMAN
Sperry Marine
HAMBURG GERMANY

	DATE	NAME
DRAWN	25.11.2009	Ebe
CHD	see ECO	
DOS		

DRAWING No.
5016-0112-04

STOCK No. 026857-0000-000

DIMENSION DRAWING
Konsole 45°schwenkbar
für Wandtochterkompass
Bracket 45° adjustable
for bulkhead repeater compass

FIRST ANGLE PROJECTION
DIMENSIONS IN MILLIMETERS

REPLACEMENT FOR:

SCALE 1:3 A4
SHEET 1
SHEETS 1

© (NORTHROP GRUMMAN SPERRY MARINE 25.11.2009)

Wasserdichter Einbau der Pulttöchter/
Watertight Installation of Console Repeaters

Type 5016-AA / Sto.-No. 074881; Type 5016-AB / Sto.-No. 074882
Type 5016-CB / Sto.-No. 074915; Type 5016-CC / Sto.-No. 074916

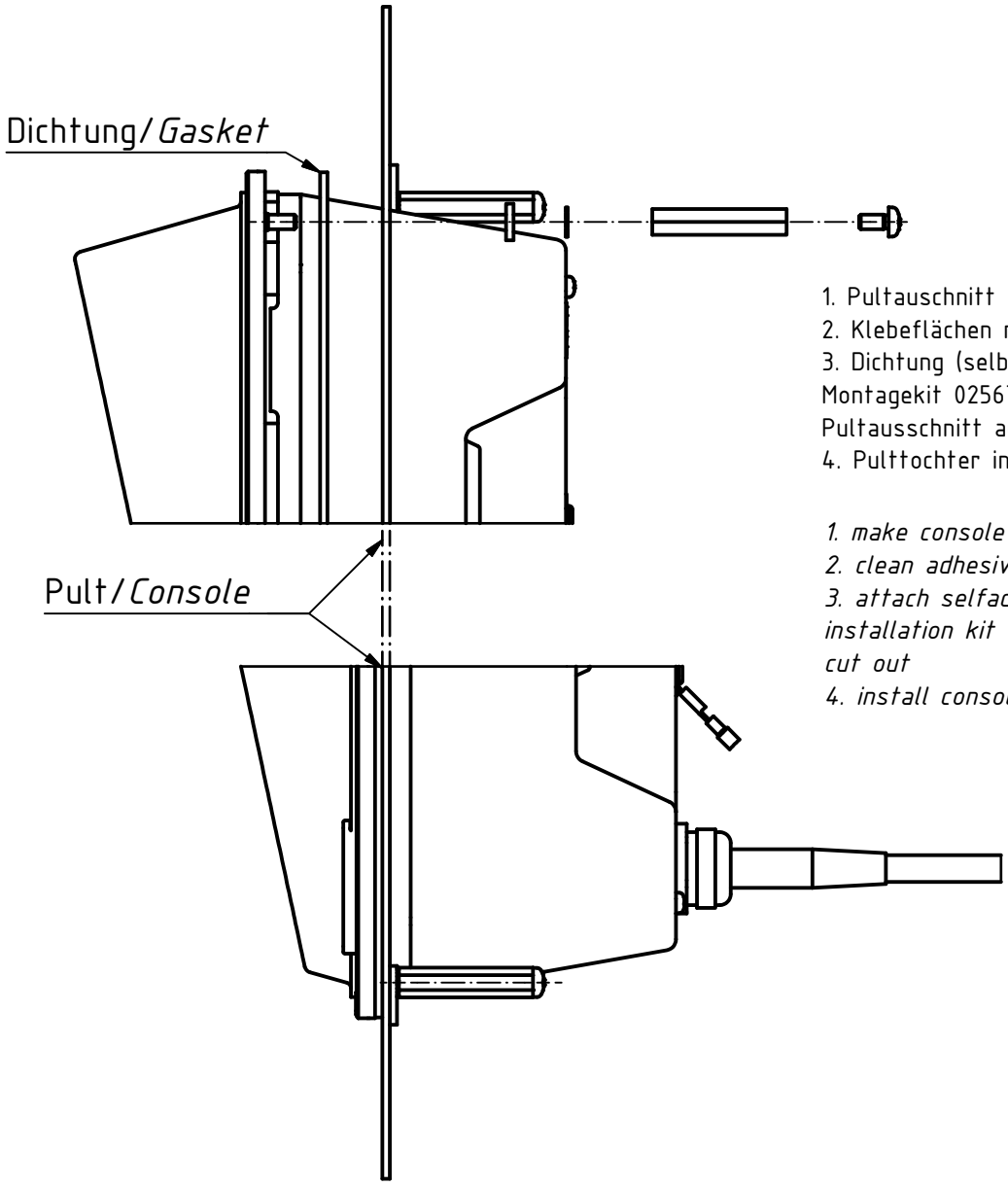

1. Pultauschnitt 181,5x181,5 vorbereiten
2. Klebeflächen reinigen
3. Dichtung (selbstklebend) aus Montagekit 025676 sauber um den Pultausschnitt aufkleben
4. Pulttochter installieren

1. make console cut out 181,5x181,5
2. clean adhesive surfaces
3. attach selfadhesive gasket from installation kit 025676 neatly around cut out
4. install console repeater

Pultausschnitt quadratisch 181,5x181,5
Square cut out for console mounting 181,5x181,5

Schutzgrad/ *Protection grade*:
Front: IP56
Rückseite/ *Back*: IP23

REV	ECO-No.	DATE	NAM
B	984159	03.02.2015	Ebe
A	982868	14.06.2010	Ebe

NORTHROP GRUMMAN
Sperry Marine
HAMBURG GERMANY

	DATE	NAME
DRAWN	03.06.2010	Ebe
CHD	see ECO	
DOS		

DRAWING No. 5016-0112-05

STOCK No. 025676-0000-000

DIMENSION DRAWING
Wasserdichter Einbau
Pulttöchter Type 5016
Watertight Installation
Console RepeatersType 5016

FIRST ANGLE PROJECTION
DIMENSIONS IN MILLIMETERS

REPLACEMENT FOR:

SCALE 1:2
A4
SHEET 1
SHEETS 1

© (NORTHROP GRUMMAN SPERRY MARINE 03.06.2010)

Repeater Adaptor Kit

Einbau von Typ 5016 Pulttochter in alten Pultausschnitt (Typ 4881)

Installation of type 5016 steering repeater into old console cutout (type 4881)

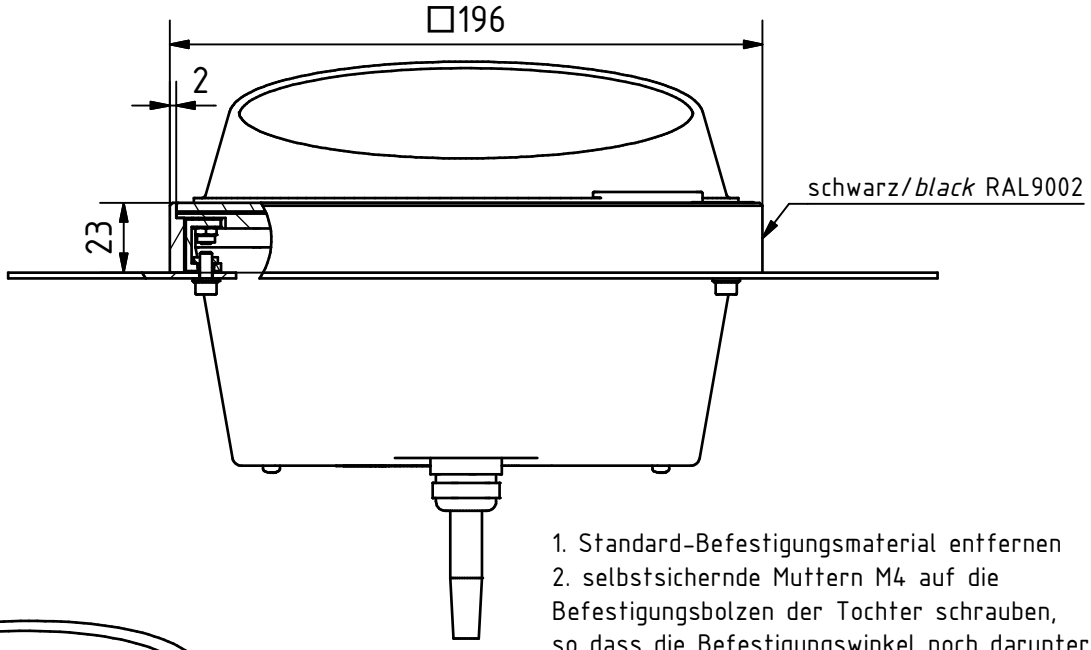

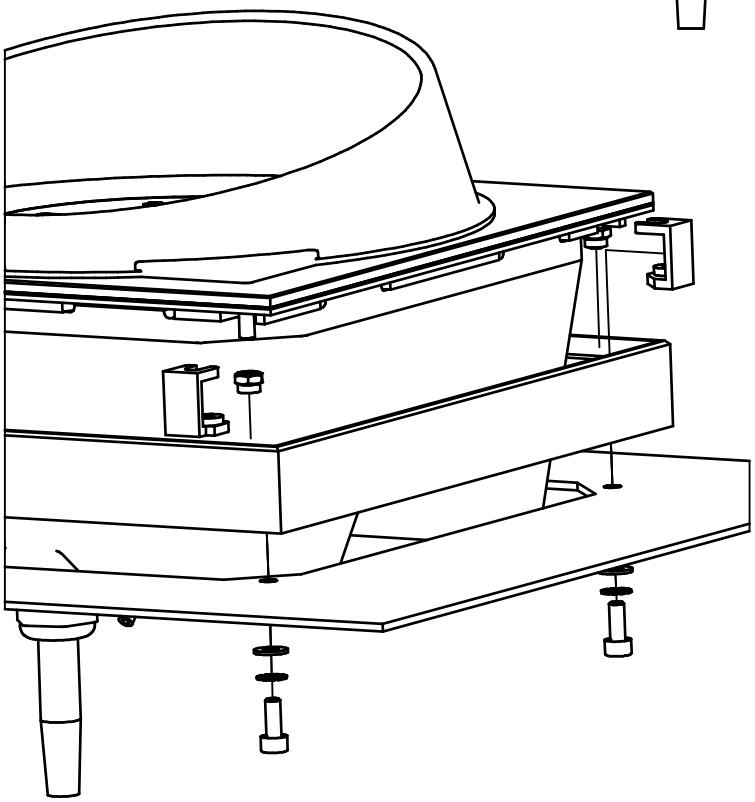

1. Standard-Befestigungsmaterial entfernen
2. selbstsichernde Muttern M4 auf die Befestigungsbolzen der Tochter schrauben, so dass die Befestigungswinkel noch darunter passen
3. alle 4 Befestigungswinkel unter die Muttern schieben
4. die Steuertochter mit den Winkeln in den Rahmen setzen
5. die Baugruppe in den alten Pultausschnitt einsetzen
6. die Tochter mit dem beiliegenden Schrauben und Scheiben am Pult befestigen

1. remove original installation screws and columns
2. screw self locking M4 nuts onto the repeaters mounting bolts so that installation brackets will snugly fit under
3. slide all 4 installation brackets under the self locking nuts
4. put the repeater with installation brackets into the adapter frame
5. put the assembly into the old cutout
6. fasten the repeater to console with the supplied screws and washers

siehe auch / *see also*: 4881-0112-01
5016-0112-02

REV	ECO-No.	DATE	NAM
A	983253	14.09.2011	Ebe

NORTHROP GRUMMAN
Sperry Marine
HAMBURG GERMANY

	DATE	NAME
DRAWN	05.09.2011	Ebe
CHD	see ECO	
DOS		

DRAWING No.
5016-0112-07

STOCK No. 025734-0000-000

DIMENSION DRAWING
Adapterrahmen, kpl.
für Retrofit von Typ 4881
Adaptor Kit
for Retrofit of Type 4881

FIRST ANGLE PROJECTION
DIMENSIONS IN MILLIMETERS

REPLACEMENT FOR:

SCALE 1:2 A4
SHEET 1
SHEETS 1

© (NORTHROP GRUMMAN SPERRY MARINE 05.09.2011)

Anschlusskasten mit Servicepunkt USB-B
CONNECTION BOX WITH SERVICE PORT USB-B

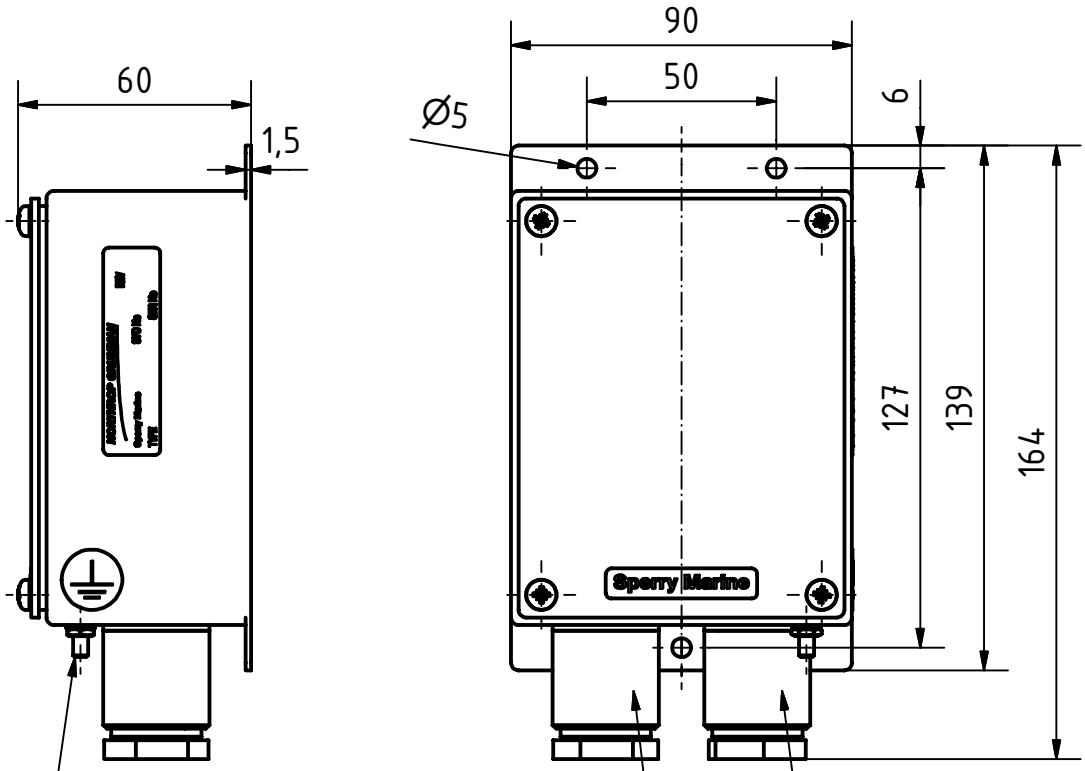

Erdungsanschluss M4
EARTHING POINT M4

Kabeleinführung für geschirmtes Kabel.
(Kabel Ø 12-17 mm)
CABLE GLAND FOR SCREENED CABLE
(CABLE Ø 12-17 mm)

Kabeleinführung für Peiltochter
geschirmtes Kabel (Kabel Ø 8-10,5 mm).
CABLE GLAND FOR BEARING REPEATER
SCREENED CABLE (CABLE Ø 8-10.5 mm).

Gewicht/ *WEIGHT*: 0,8 kg

Schutzgrad/ *Protection grade*: IP65

REV	ECO-No.	DATE	NAM
A	982719	22.10.2009	Ebe

NORTHROP GRUMMAN Sperry Marine		DATE	NAME
	DRAWN	29.05.2009	Ebe
	CHD	see ECO	
HAMBURG GERMANY	DOS		

DRAWING No.
4894-0112-04

STOCK No. 074859-0000-000

DIMENSION DRAWING
Anschlusskasten
für RCS 5016
CONNECTION BOX
for RCS 5016

FIRST ANGLE PROJECTION | DIMENSIONS IN MILLIMETERS

REPLACEMENT FOR:

SCALE 1:2
A4
SHEET 1
SHEETS 1

© (NORTHROP GRUMMAN SPERRY MARINE 29.05.2009)

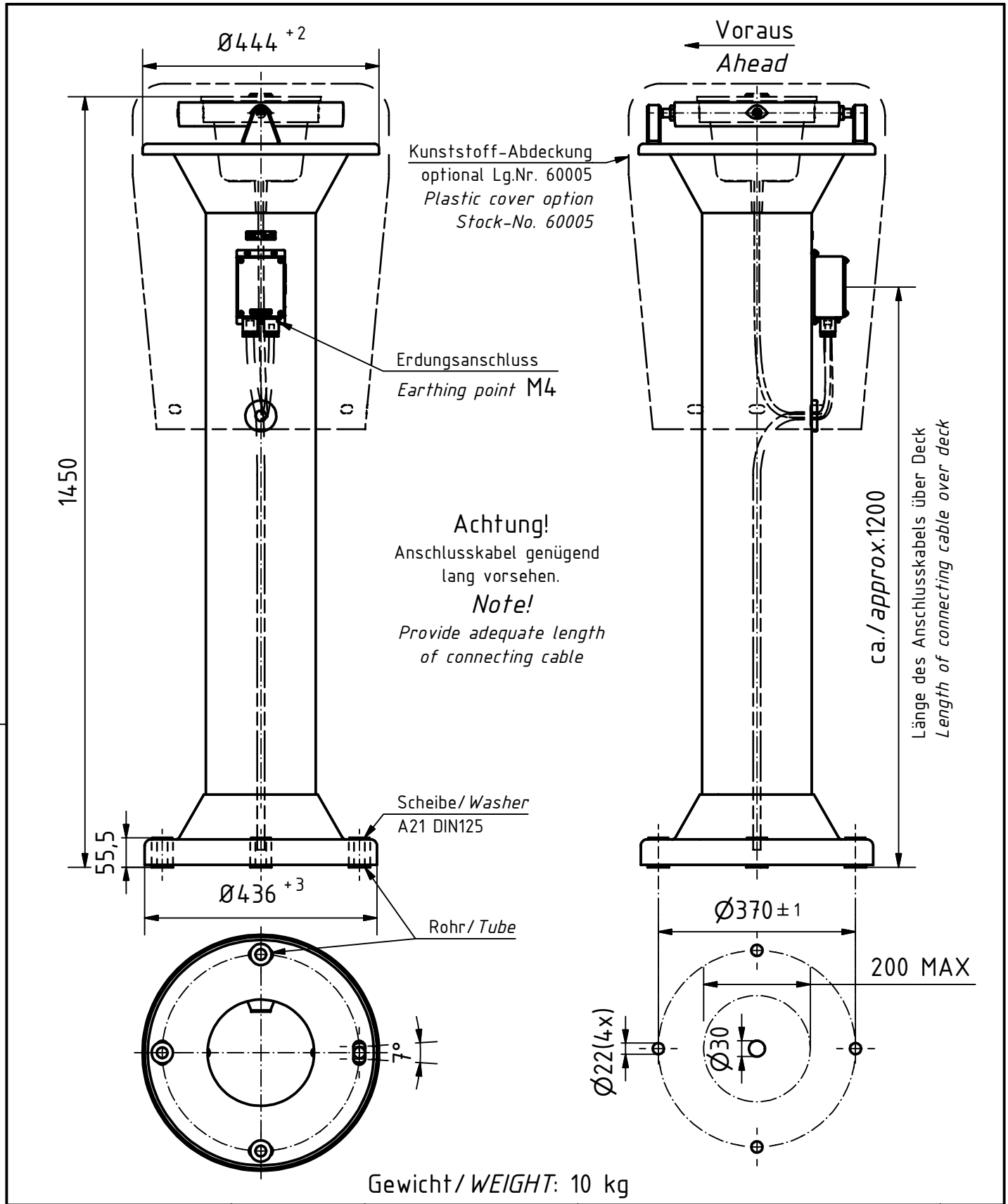

Gewicht/*WEIGHT*: 10 kg

				NORTHROP GRUMMAN		DATE	NAME	DIMENSION DRAWING
				Sperry Marine	DRAWN	23.10.2009	Ebe	Peilsäule mit Anschlusskasten
					CHD	see ECO		
				HAMBURG GERMANY	DOS			BEARING REPEATER STAND with terminal box
				DRAWING No. 4622-0112-03				FIRST ANGLE PROJECTION / DIMENSIONS IN MILLIMETERS
A	982719	23.10.2009	Ebe	STOCK No. 074887-0000-000				REPLACEMENT FOR:
REV	ECO-No.	DATE	NAM					

SCALE 1:10 A4

SHEET 1

SHEETS 1

© (NORTHROP GRUMMAN SPERRY MARINE 23.10.2009)

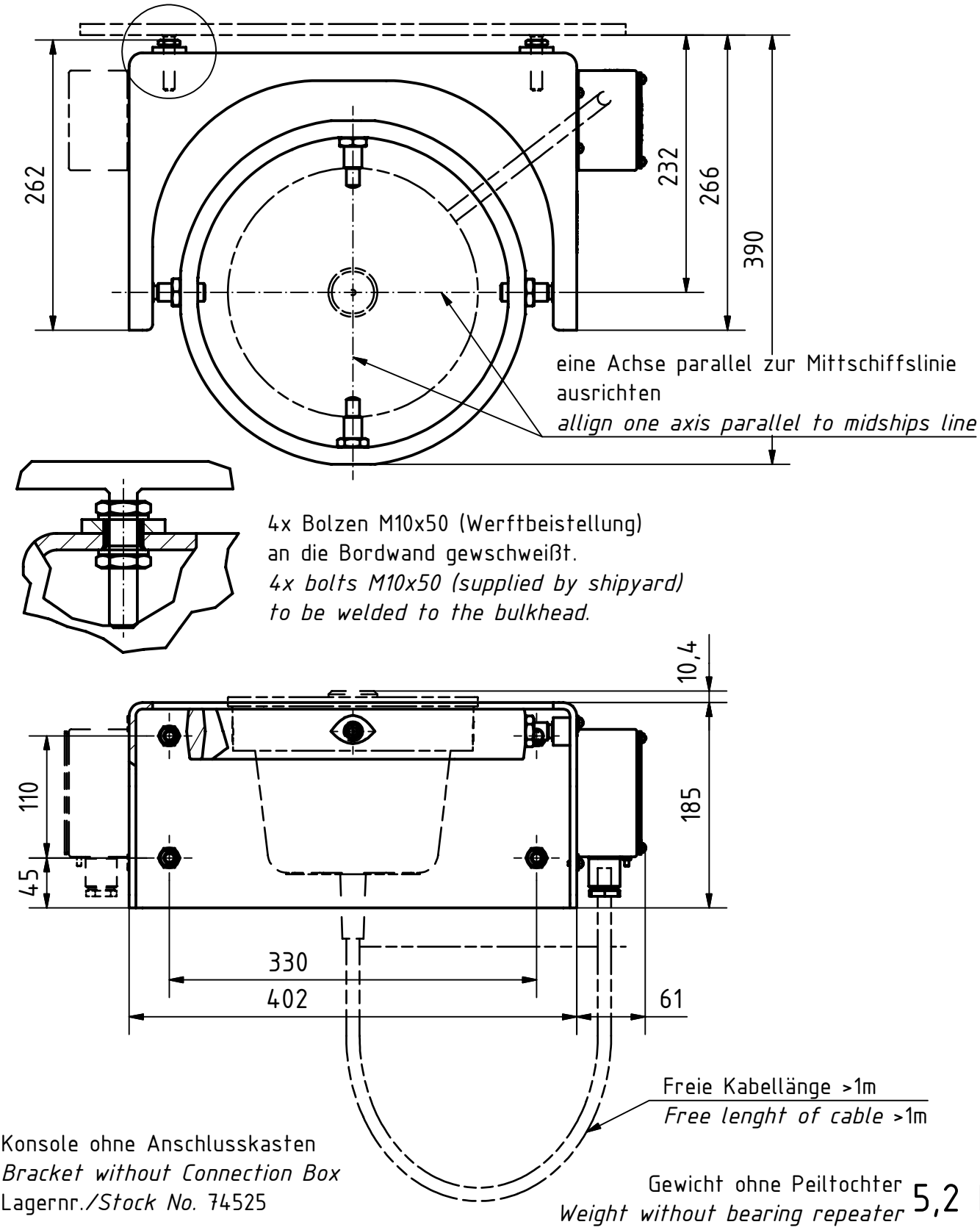

REV	ECO-No.	DATE	NAM
A	982719	22.10.2009	Ebe

NORTHROP GRUMMAN
Sperry Marine
HAMBURG GERMANY

	DATE	NAME
DRAWN	14.10.2009	Ebe
CHD	see ECO	
DOS		

DRAWING No. 4890-0112-03

STOCK No. 074886-0000-000

DIMENSION DRAWING

Peilkonsole
mit Anschlusskasten

Bearing repeater bracket
with connection box

FIRST ANGLE PROJECTION | DIMENSIONS IN MILLIMETERS

REPLACEMENT FOR:

SCALE 1:5 A4

SHEET 1

SHEETS 1

© (NORTHROP GRUMMAN SPERRY MARINE 14.10.2009)

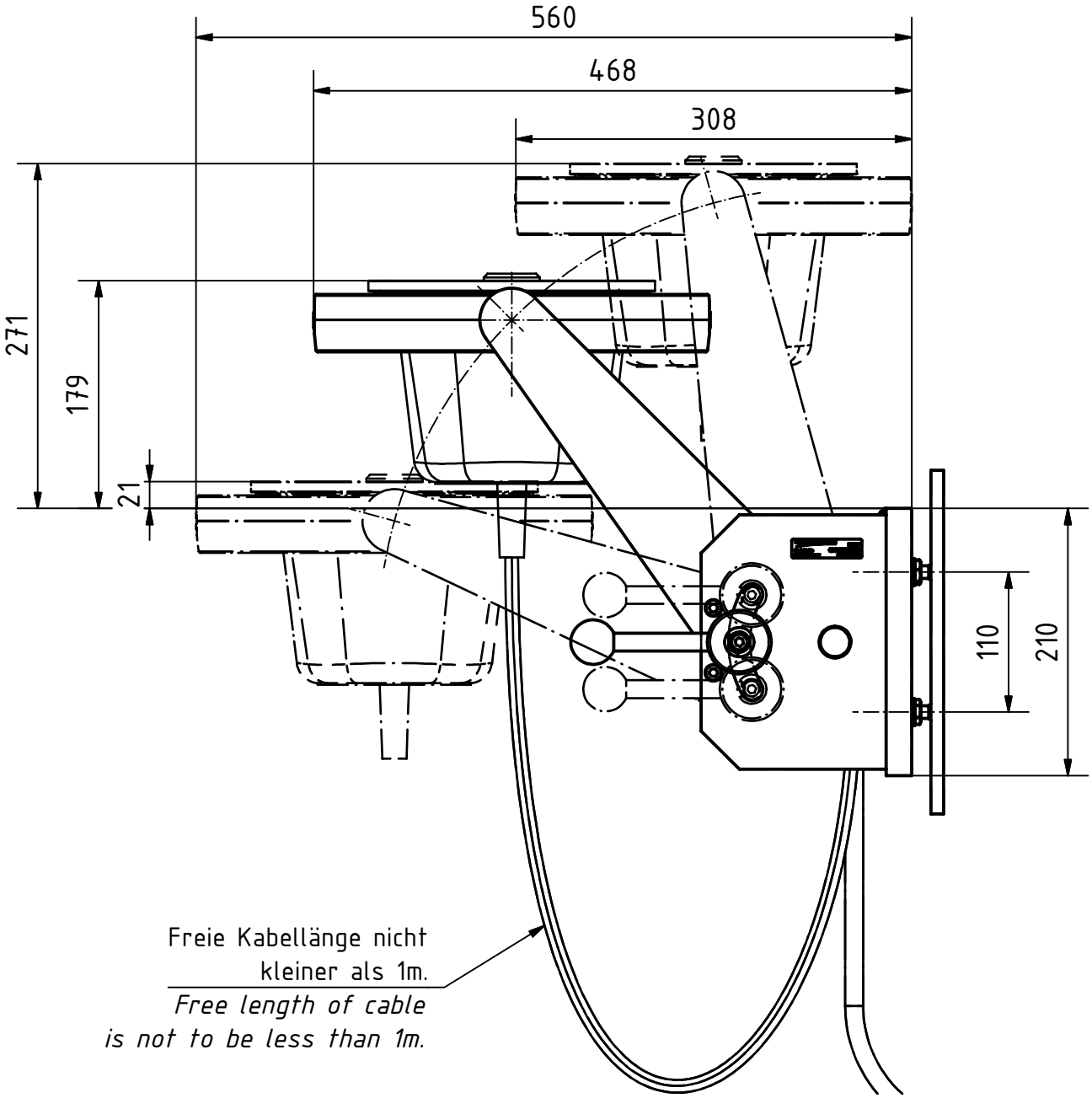

Ohne Peiltochter
Bearing Repeater not included
Gewicht/ *WEIGHT*: 16,5 kg

				NORTHROP GRUMMAN Sperry Marine		DATE	NAME
					DRAWN	26.10.2009	Ebe
					CHD	see ECO	
				HAMBURG GERMANY	DOS		
A	982719	26.10.2009	Ebe	DRAWING No. 4905-0112-03			
REV	ECO-No.	DATE	NAM	STOCK No. 074888-0000-000			

DIMENSION DRAWING

Konsole höhenverst.
mit Anschlusskasten

Bracket adjustable
with terminal box

FIRST ANGLE PROJECTION | DIMENSIONS IN MILLIMETERS

REPLACEMENT FOR:

SCALE 1:5 A4

SHEET 1

SHEETS 2

© (NORTHROP GRUMMAN SPERRY MARINE 26.10.2009)

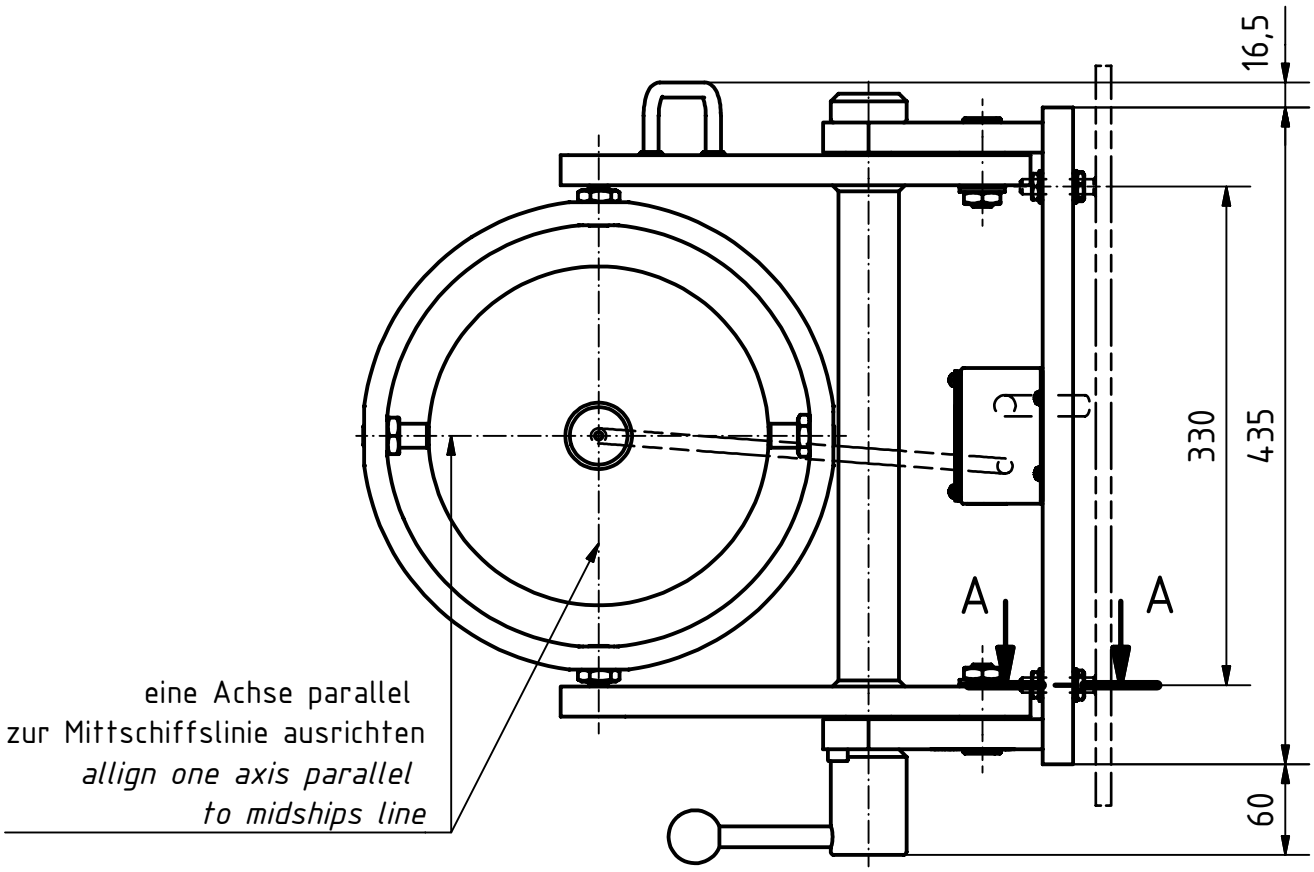

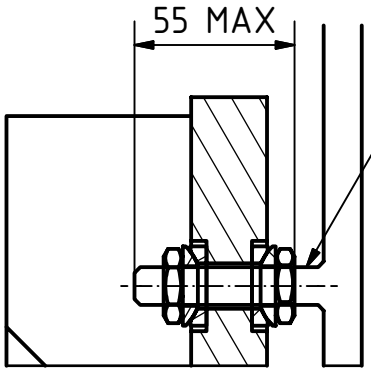

A-A (1 : 2)

4x Bolzen M10x50 (Werftbeistellung)
an die Bordwand gewschweißt.
4x bolts M10x50 (supplied by shipyard)
to be welded to the bulkhead.

Bei überbreiten handläufen ist die
Bolzenlänge entsprechend anzupassen
oder ein Fundament vorzusehen.
Increase the length of bolts or use
additional base plate to accomodate
an extra wide hand rail.

8x Mutter, Kugelscheibe und Kegelpfanne
für A-Fehler Einstellung (±3°).
8x nut, cone washer, pan washer for correction
of alignment error (±3°).

REV	ECO-No.	DATE	NAM
A	982719	26.10.2009	Ebe

NORTHROP GRUMMAN
Sperry Marine
HAMBURG GERMANY

	DATE	NAME
DRAWN	26.10.2009	Ebe
CHD	see ECO	
DOS		

DRAWING No. 4905-0112-03

STOCK No. 074888-0000-000

DIMENSION DRAWING

Konsole höhenverst.
mit Anschlusskasten

Bracket adjustable
with terminal box

FIRST ANGLE PROJECTION | DIMENSIONS IN MILLIMETERS

REPLACEMENT FOR:

SCALE 1:5 A4

SHEET 2

SHEETS 2

© (NORTHROP GRUMMAN SPERRY MARINE 26.10.2009)

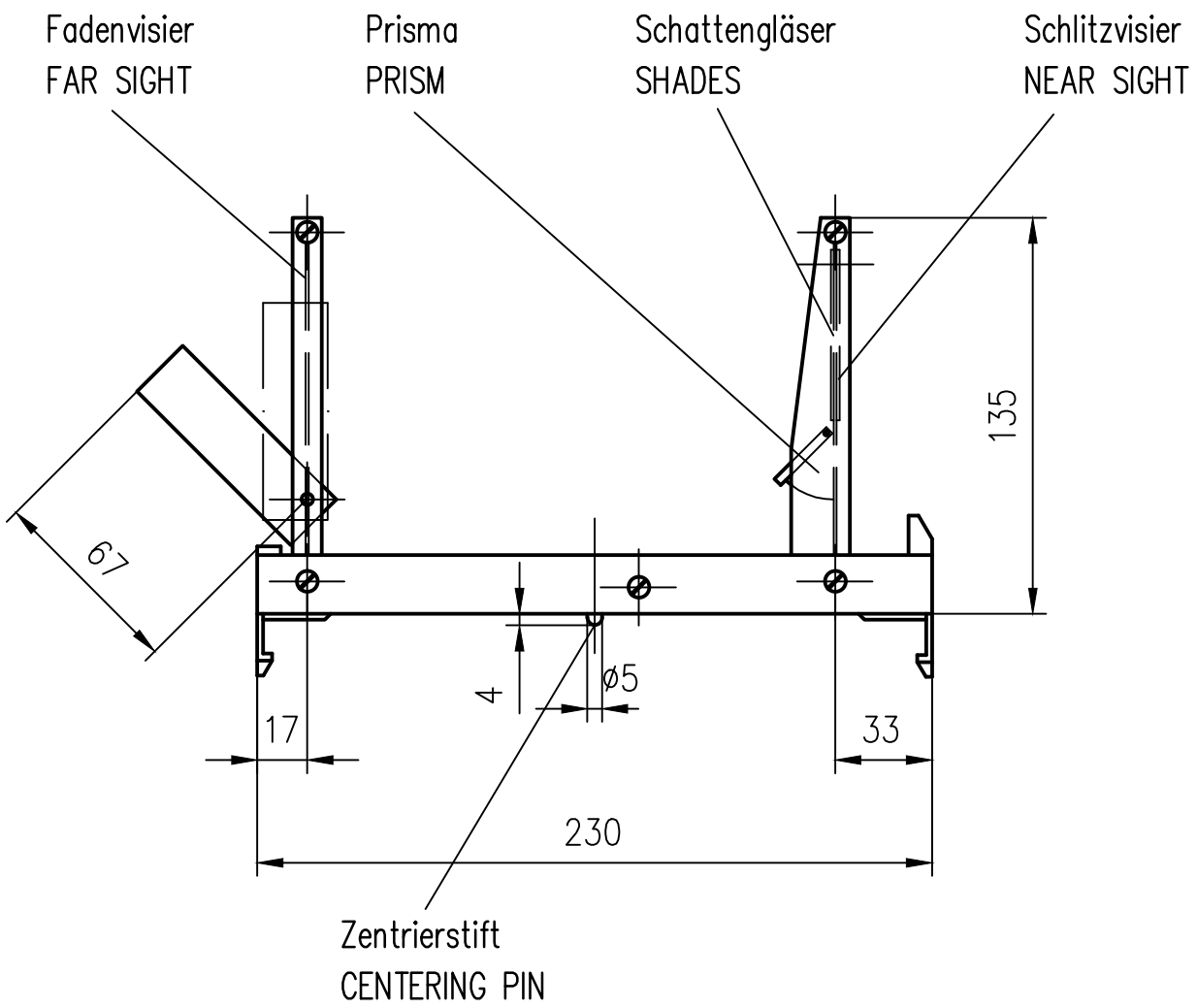

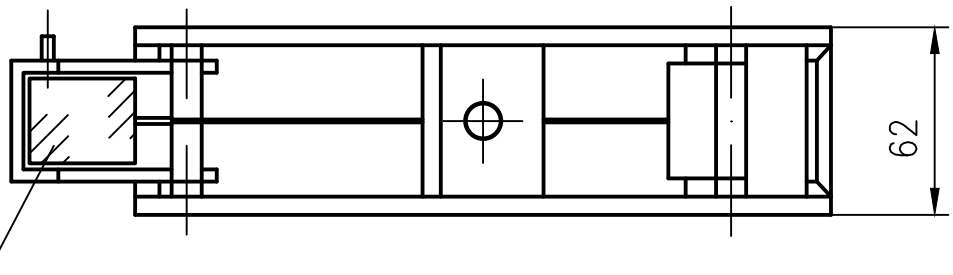

Gewicht:
Weight: 0,6 kg

REV	ECO-No.	DATE	NAME
B	984159	03.02.15	Ebe
AA	98237	22.02.01	Ho.

NORTHROP GRUMMAN
Sperry Marine
HAMBURG GERMANY

	DATE	NAME
DRAWN	23.07.1998	Ho.
CHD	see ECO	
DOS	2535-0112-01	

DRAWING No. 2535-0112-01

FIRST ANGLE PROJECTION | DIMENSIONS IN MILLIMETERS

STOCK No. 075135-0000-000

DIMENSION DRAWING

Peilvorrichtung PV23

AZIMUTH DEVICE

REPLACEMENT FOR:

FREE SCALE: DIN ISO 2768 mH

SCALE /

SHEET 1

SHEETS 1

© (NORTHROP GRUMMAN SPERRY MARINE 23.07.1998)

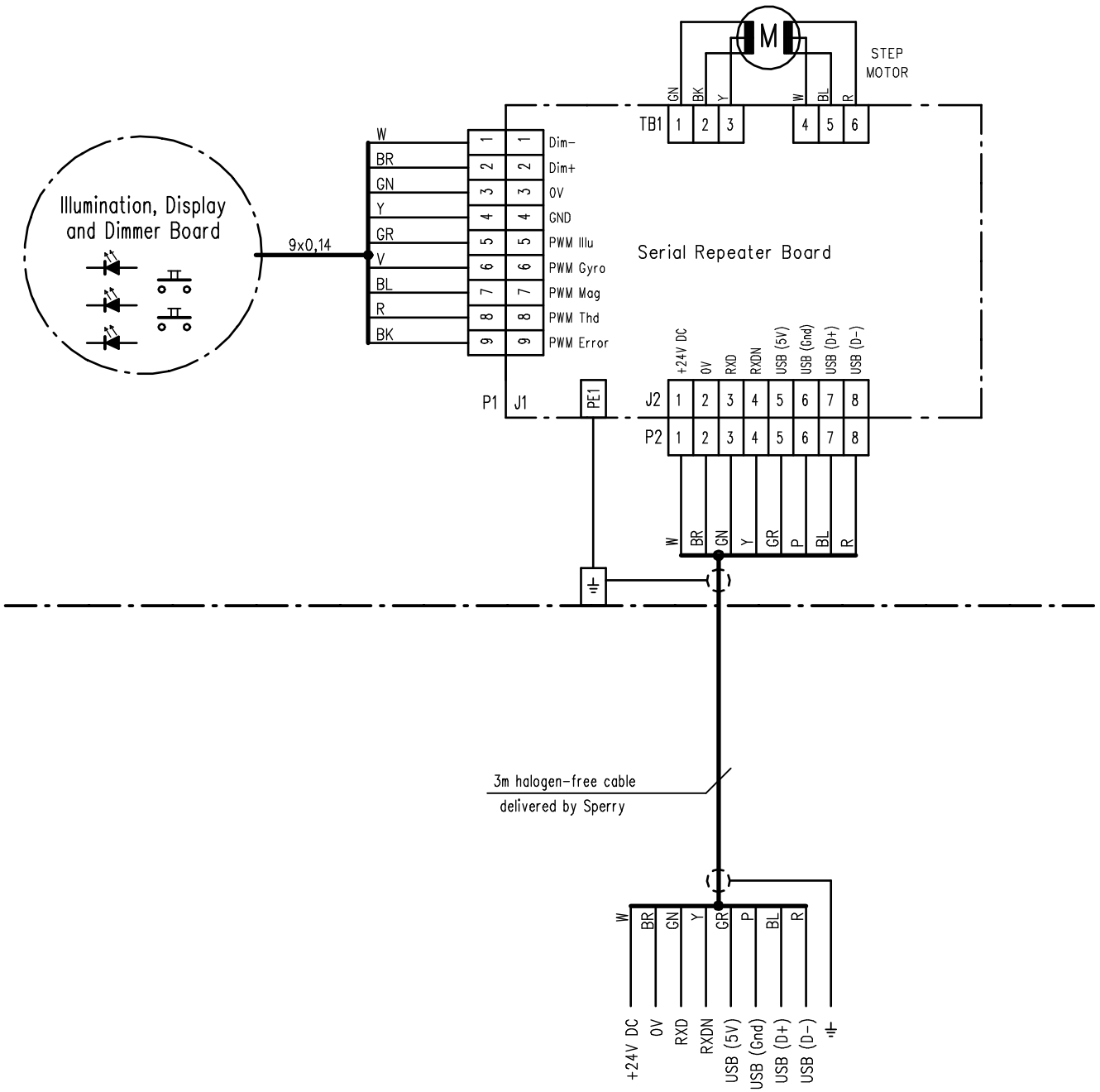

				5016 74880		Date	Name
					DRAWN	14.01.2010	Geisler
					DESIGN	26.11.2009	Magner
				01150124\5016-0115-01	CHD ECO		
1	-	14.01.10	Geisler				
REV	ECO-No.	DATE	NAME				

NORTHROP GRUMMAN

Sperry Marine

Hamburg Germany

TITLE Wiring Diagram

Peiltochter
BEARING REPEATER

DRAWING No. 5016-0115-01 /1

SHEET 1 SHEETS 1

© NORTHROP GRUMMAN SPERRY MARINE 14.01.2010
Each modification of this drawing requires the approval from NORTHROP GRUMMAN SPERRY MARINE HAMBURG in written form.

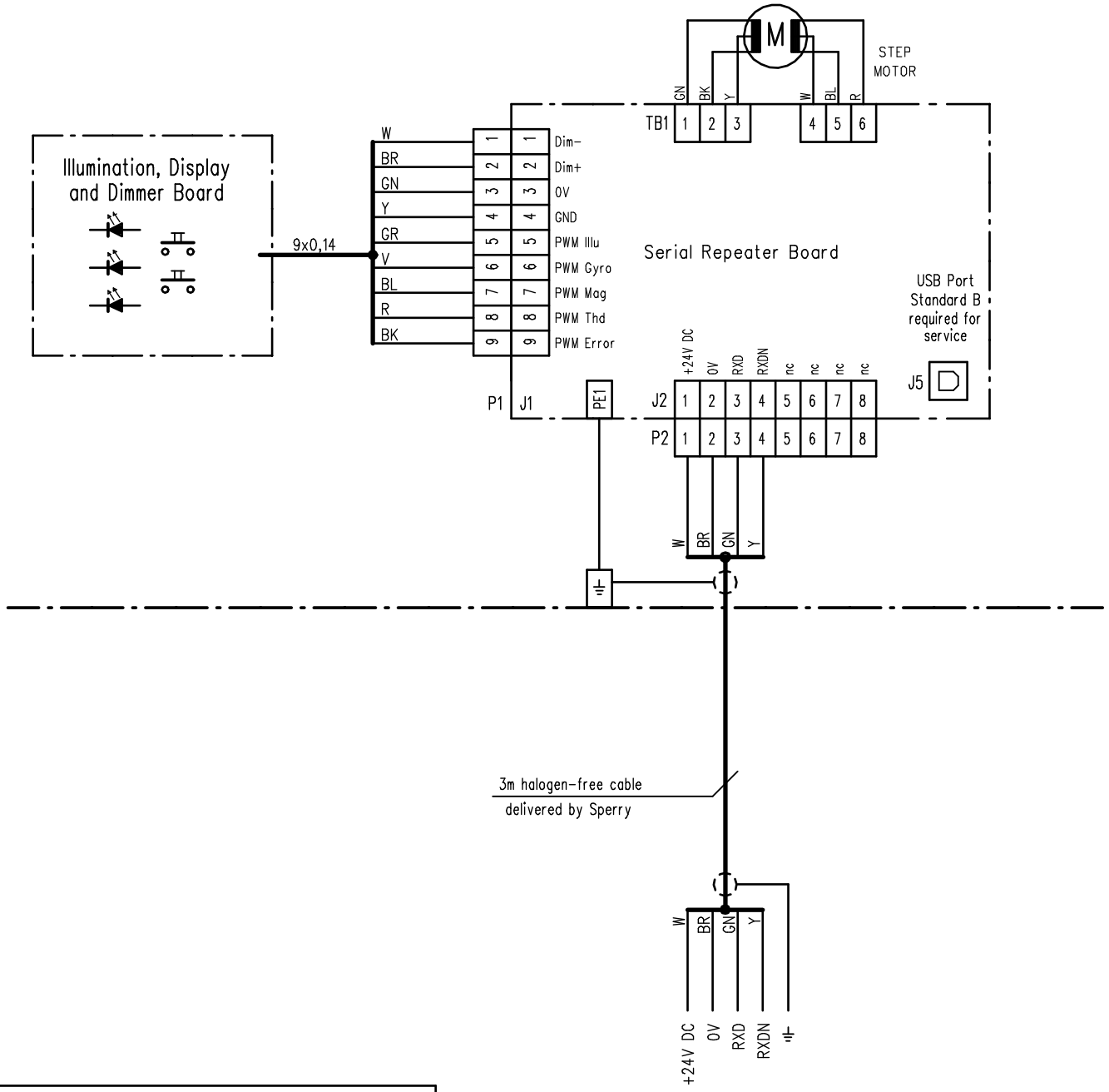

5016-AA 74881	Steering Repeater
5016-AB 74882	Magnetic Repeater

REV	ECO-No.	DATE	NAME
1	-	14.01.10	Geisler

	Date	Name
DRAWN	14.01.2010	Geisler
DESIGN	26.11.2009	Magner
CHD ECO		

01150124\5016-0115-02

NORTHROP GRUMMAN
Sperry Marine
Hamburg Germany

TITLE Wiring Diagram

Steuer/Magnet Tochter
STEERING/MAGNETIC REPEATER

DRAWING No. 5016-0115-02 /1

SHEET 1 SHEETS 1

© NORTHROP GRUMMAN SPERRY MARINE 14.01.2010
Each modification of this drawing requires the approval from NORTHROP GRUMMAN SPERRY MARINE HAMBURG in written form.

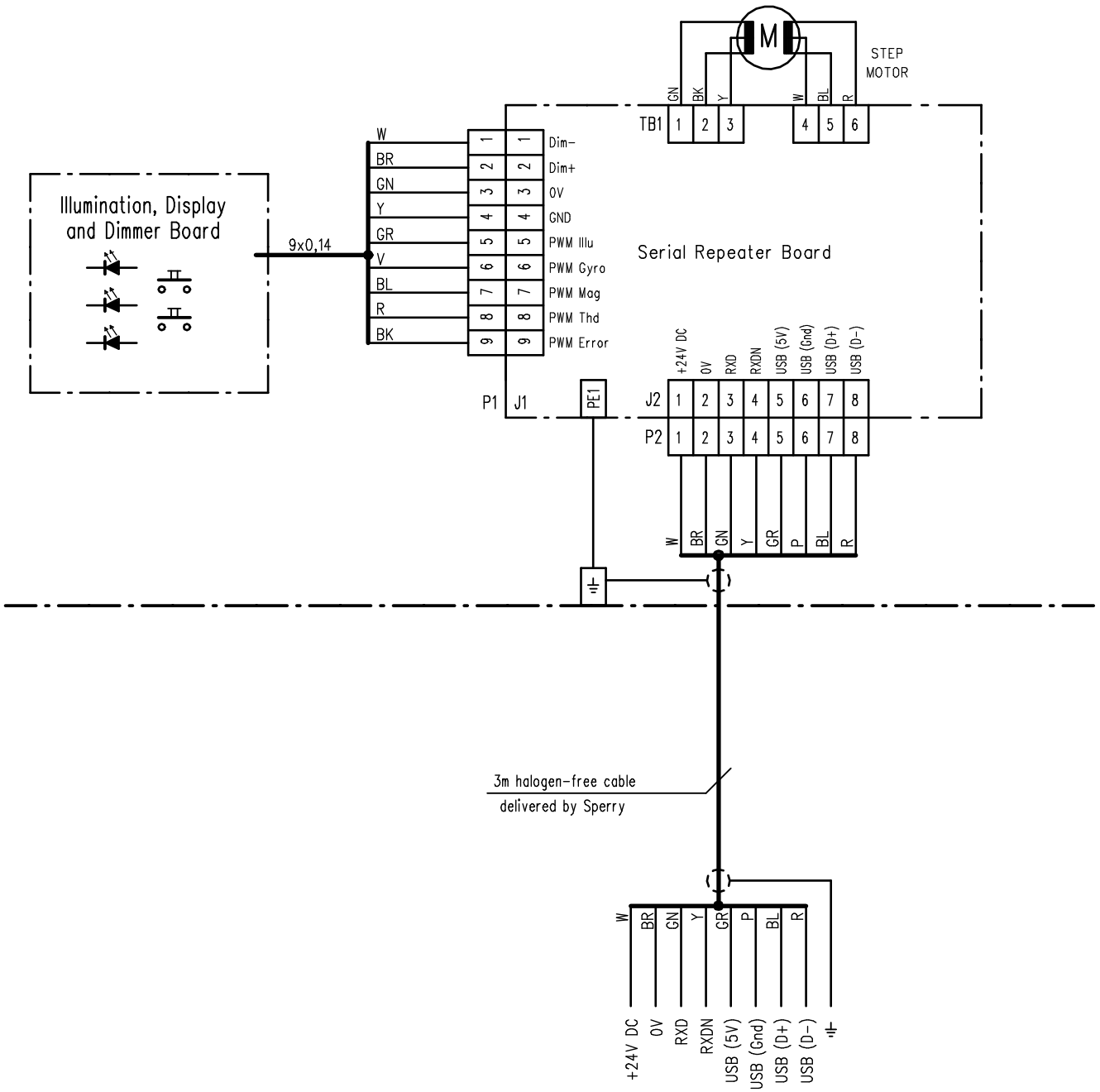

				5016-AC 74883		Date	Name
					DRAWN	14.01.2010	Geisler
					DESIGN	26.11.2009	Magner
				01150124\5016-0115-03	CHD ECO		
1	-	14.01.10	Geisler				
REV	ECO-No.	DATE	NAME				

NORTHROP GRUMMAN

Sperry Marine

Hamburg Germany

TITLE Wiring Diagram

Wandtochter
BULKHEAD REPEATER

DRAWING No. 5016-0115-03 /1

SHEET 1 SHEETS 1

© NORTHROP GRUMMAN SPERRY MARINE 14.01.2010
Each modification of this drawing requires the approval from NORTHROP GRUMMAN SPERRY MARINE HAMBURG in written form.

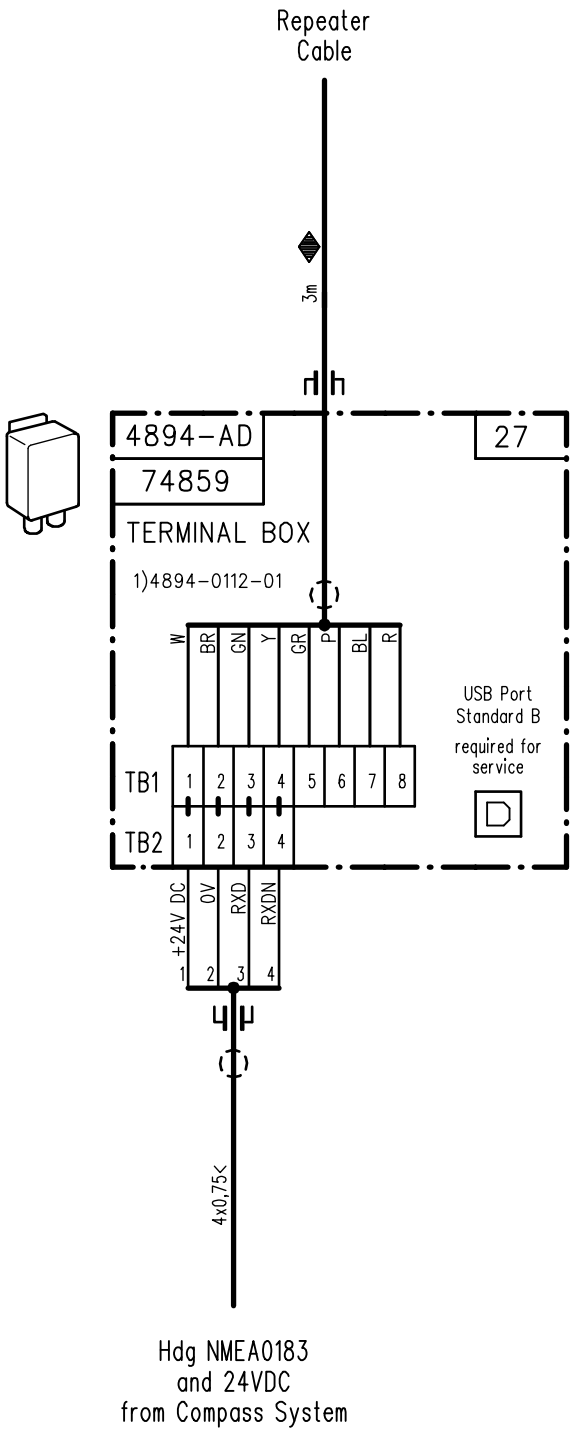

Caution

= Screened cables have to be grounded through cable glands.

REMARKS

1) Dimension Drawing
2) Wiring Diagram

● if required

< Screened Cable

(AA) all cables marked with letters are Sperry Marine Supply of max. 3m length

REV	ECO-No.	DATE	NAME
1	-	17.03.10	Geisler

4894-AD
74859

01150124\4984AD-0115-01

	Date	Name
DRAWN	22.03.2010	Geisler
DESIGN	17.03.2010	Magner
CHD ECO		

NORTHROP GRUMMAN
Sperry Marine
Hamburg Germany

TITLE Wiring Diagram

Anschlusskasten
TERMINAL BOX

DRAWING No.
4984AD-0115-01 /1

SHEET 1
SHEETS 1

© NORTHROP GRUMMAN SPERRY MARINE 22.03.2010
Each modification of this drawing requires the approval from NORTHROP GRUMMAN SPERRY MARINE HAMBURG in written form.

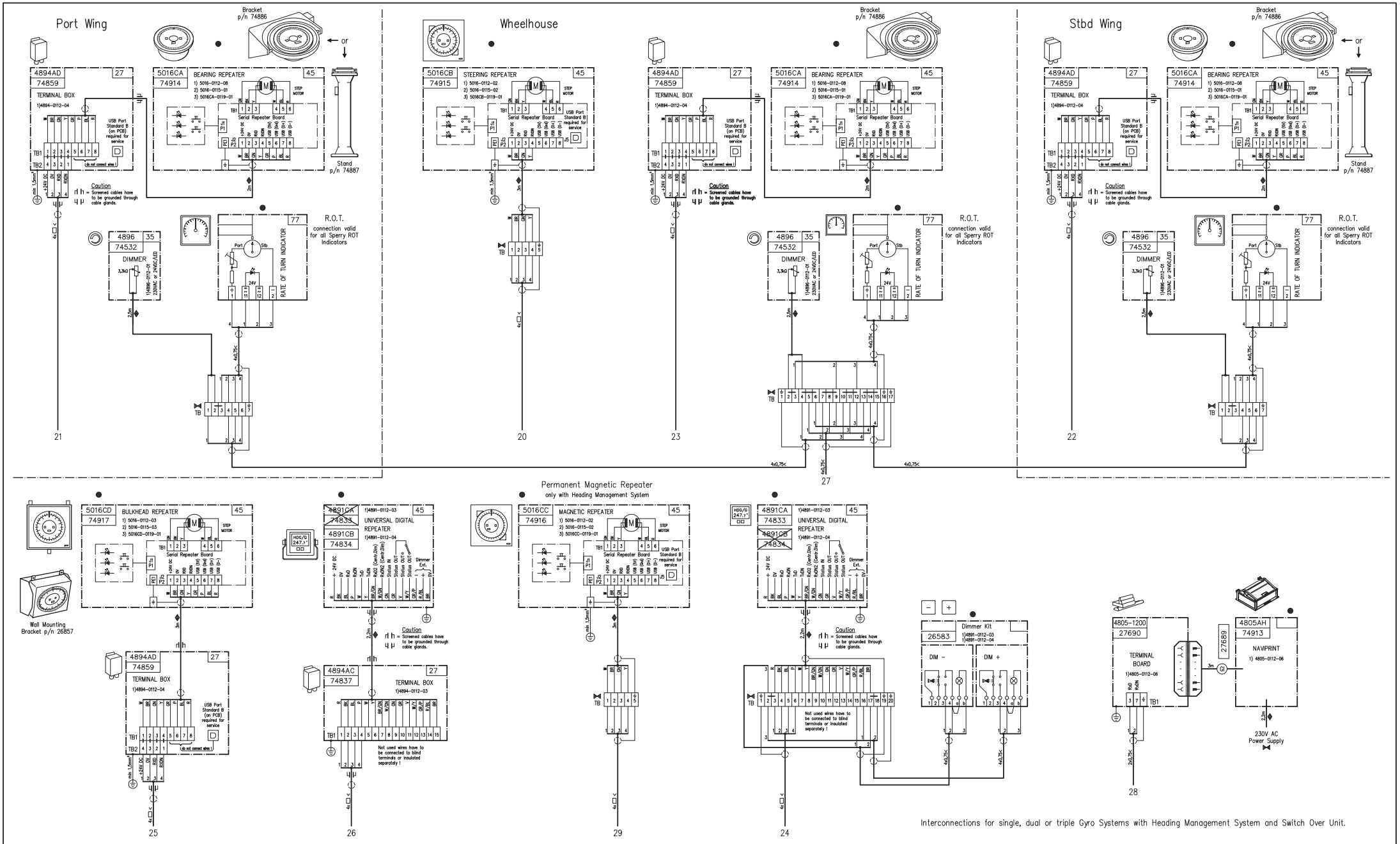

Interconnections for single, dual or triple Gyro Systems with Heading Management System and Switch Over Unit.

Cables marked with ▭ : Cross Section
up to 100m length: 0,75mm²
over 100m length: 1,5mm²

REMARKS
1) Dimension Drawing
2) Wiring Diagram
● If required
< Screened Cable
(AA) all cables marked with letters are Sperry Marine Supply of max. 3m length

Caution
All Power Supplies must be separately fused !
All Housings must be grounded !
If screened cables are not grounded as shown, malfunction will occur !

TYPE-NO	IDENT-NO
STOCK-NO	

General Notes:
1. All cables shipyard supplied unless otherwise specified
2. ⋈ Components Owner- or Yard-Delivery
3. ◆ Cables delivered by Sperry Marine
4. All cables to be screened, unless otherwise specified
5. All units unless otherwise specified to be directly connected to ship's earth
6. Cable diameters acc. to classification requirements unless otherwise stated
7. All cables to include a min 1/10 of unused conductors

Initial	A	981 900	02.02.15	Lau	
DESCRIPTION	REV	ECO-No.	DATE	NAME	

Standard drawing		Date	Name
	DRAWN	29.01.2015	Lau
	DESIGN	29.01.2015	Gassig
4932-0553-84A_501.DWG	CHD ECO	02.02.2015	Dellmann

NORTHROP GRUMMAN
Sperry Marine
HAMBURG, GERMANY

TITLE
COMPASS SYSTEM REPEATER

DRAWING No. 4932-0553-84 /A
SHEET 1 SHEETS 1

© NORTHROP GRUMMAN SPERRY MARINE 29.01.2015
Each modification of this drawing requires the approval from NORTHROP GRUMMAN SPERRY MARINE in written form.

Sperry Marine Service: www.sperrymarine.com/offices

Northrop Grumman Sperry Marine B.V. (Representative Office)
Woltmanstr. 19 • D-20097 • Hamburg, Germany
Tel.: +49-40-299 00-0 • Fax: +49-40-299 00-146 • E-mail: service.eu@sperry.ngc.com

Other ManualsLib Projects

www.manualslib.com

www.manualslib.de

www.manualslib.es

www.manualslib.fr

www.manualslib.nl

www.manualslib.mx

www.manualslib.tech 30+ Languages